Sales Code: CBI3041A

Barcode: 5056678453858

Brand: Hudson Reed

Description: Hudson Reed Fusion Bleached Oak 500mm 2 Drawer Wall Hung Vanity Unit With Basin



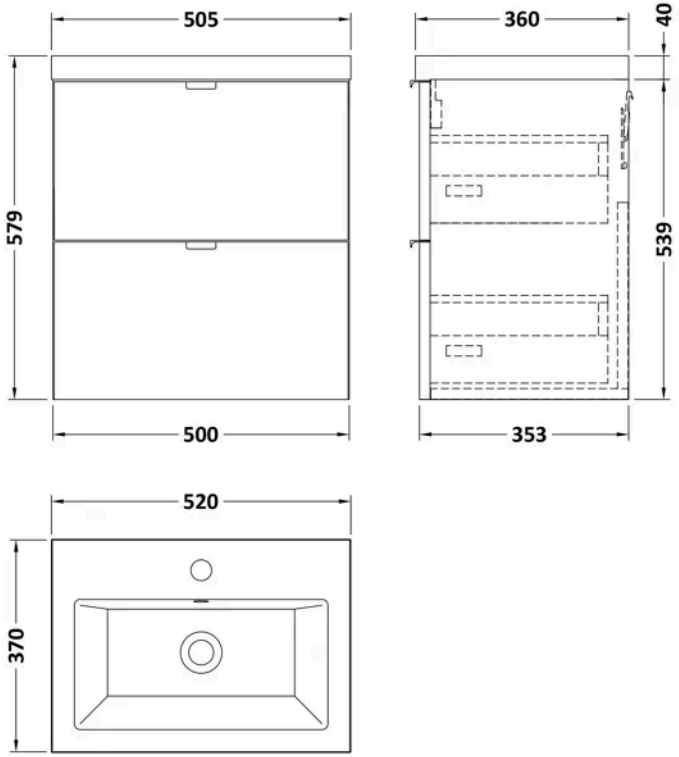

Product Dimensions

Product	580 x 505 x 383mm (H x W x D)
Packaged	550 x 550 x 550mm (H x W x D)
Nett Weight	26.1 kg
Packaged Weight	26.6 kg

Packaging Details

Box Qty	2

Product Details

Country of Origin	United Kingdom
Product Material	Mfc Textured Woodgrain
Colour/Finish	Bleached Oak
Mount Type	Wall Hung
Style	Contemporary
Handle Type	Finger Pull
Construction Method	Cam & Wood Dowel
Construction Type	Rigid
Drawer Type	80mm High Metal Soft-close
Fascia Finish	Mfc Smooth Woodgrain
Fsc Certified	Yes
Handles Included	Yes
Inner Bowl Height	103 mm
Leg Set Included	No
Material Thickness	18 mm
No. Drawers	2
No. Of Tapholes	1
No. Shelves	1
Number Of Bowls	1
Number Of Shelves	1
Overflow Included	Yes
Tap Included	No
Waste Included	No
Waste Shroud	Yes

© ROXOR Group

Sales Code: CBM312 **Barcode:** 5056211875819 **Brand:** nuie **Description:** nuie Arno Compact 1 Tap Hole 520mm Ceramic Basin



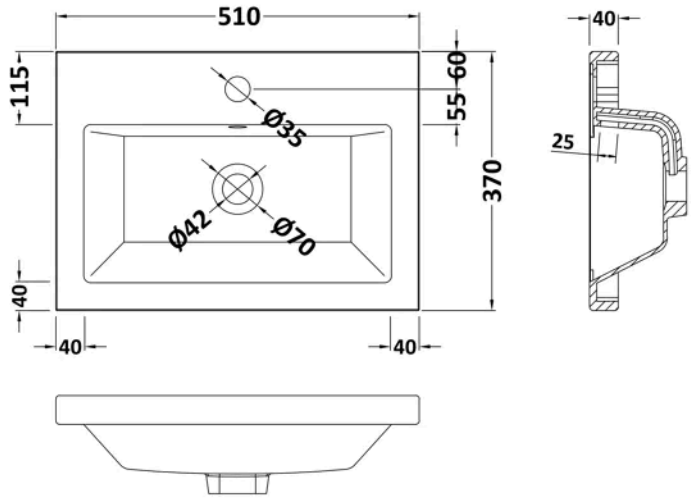

Product Dimensions

Product	150 x 520 x 370mm (H x W x D)
Packaged	420 x 210 x 550mm (H x W x D)
Nett Weight	8.1 kg
Packaged Weight	8.1 kg

Packaging Details

Box Qty	1

Product Details

Country of Origin	China
Product Material	Vitreous China
Colour/Finish	White
Style	Contemporary
Ce Certified	Yes
Inner Bowl Height	103 mm
No. Of Tapholes	1
Number Of Bowls	1
Overflow Included	Yes
Tap Included	No
Waste Included	No

© ROXOR Group

Sales Code: OFF3036 **Barcode:** 5056678436929 **Brand:** Hudson Reed **Description:** Hudson Reed Fusion 500mm 2 Drawer Wall Hung Vanity Unit (355mm)



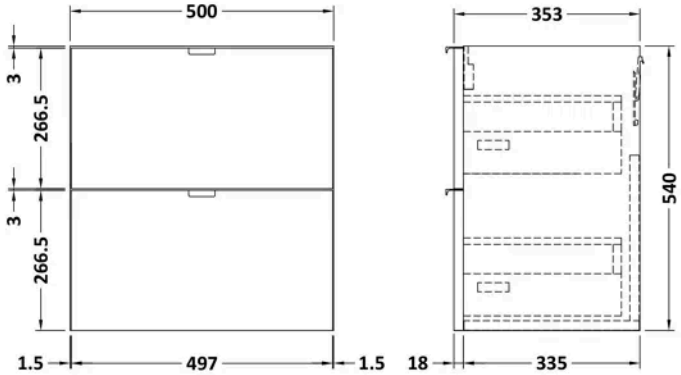

Product Dimensions

Product	540 x 500 x 383mm (H x W x D)
Packaged	560 x 520 x 375mm (H x W x D)
Nett Weight	18.5 kg
Packaged Weight	19 kg

Packaging Details

Box Qty	1

Product Details

Country of Origin	United Kingdom
Product Material	Mdf Painted Matt
Colour/Finish	Bleached Oak
Mount Type	Wall Hung
Style	Contemporary
Construction Method	Cam & Wood Dowel
Construction Type	Rigid
Fascia Finish	Mdf Painted Matt
Handles Included	Yes
Material Thickness	18 mm
No. Drawers	2

© ROXOR Group