Sales Code: CBI3034

Barcode: 5056678453742

Brand: Hudson Reed

Description: Hudson Reed Fusion Bleached Oak 1200mm 4 Door Floor standing Vanity Unit With 2 Tap Holes Double Basin



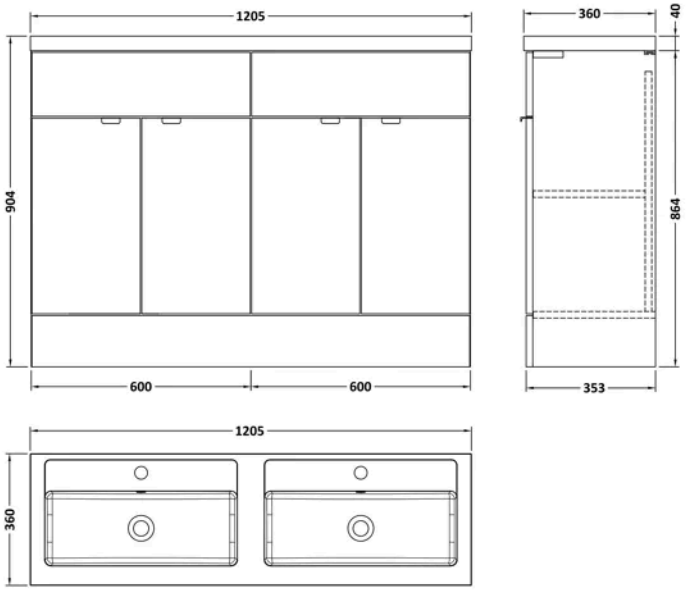

Product Dimensions

Product	904 x 1205 x 355mm (H x W x D)
Packaged	550 x 550 x 550mm (H x W x D)
Nett Weight	58.62 kg
Packaged Weight	59.12 kg

Product Details

Country of Origin	United Kingdom
Product Material	Mfc Textured Woodgrain
Colour/Finish	Bleached Oak
Mount Type	Floor
Style	Contemporary
Handle Type	Finger Pull
Construction Method	Cam & Wood Dowel
Construction Type	Rigid
Fascia Finish	Mfc Smooth Woodgrain
Fsc Certified	Yes
Handles Included	Yes
Inner Bowl Height	103 mm
Leg Set Included	No
Material Thickness	18 mm
No. Doors	4
No. Of Tapholes	2
No. Shelves	1
Number Of Bowls	2
Number Of Shelves	1
Overflow Included	Yes
Tap Included	No
Waste Included	No
Waste Shroud	No

© ROXOR Group

Sales Code: OFF3008 **Barcode:** 5056678436790 **Brand:** Hudson Reed **Description:** Hudson Reed Fusion Bleached Oak 600mm Floor Standing Vanity Unit



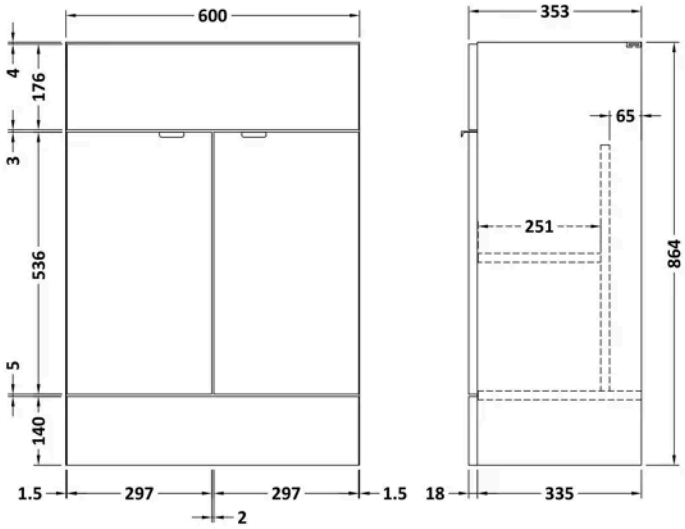

Product Dimensions

Product	864 x 600 x 355mm (H x W x D)
Packaged	375 x 625 x 900mm (H x W x D)
Nett Weight	20.5 kg
Packaged Weight	21 kg

Packaging Details

Box Qty	1

Product Details

Country of Origin	United Kingdom
Product Material	Mfc Textured Woodgrain
Colour/Finish	Bleached Oak
Mount Type	Floor
Style	Contemporary
Handle Type	Finger Pull
Construction Method	Cam & Wood Dowel
Construction Type	Rigid
Fascia Finish	Mfc Textured Woodgrain
Fsc Certified	Yes
Handles Included	Yes
Material Thickness	18 mm
No. Doors	2
Waste Shroud	No

© ROXOR Group

Sales Code: PMB425 **Barcode:** 5056211815143 **Brand:** Hudson Reed **Description:** Hudson Reed 1200mm 2 Tap Hole Twin Polymarble Basin



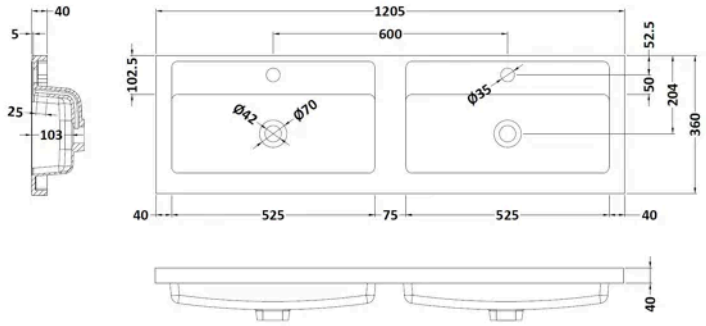

Product Dimensions

Product	135 x 1205 x 360mm (H x W x D)
Packaged	100 x 1205 x 360mm (H x W x D)
Nett Weight	18.12 kg
Packaged Weight	18.12 kg

Packaging Details

Box Qty	1

Product Details

Country of Origin	China
Product Material	Polymarble
Colour/Finish	White
Style	Contemporary
Ce Certified	Yes
No. Of Tapholes	2

© ROXOR Group