Sales Code: CAR805 **Barcode:** 5056678445129 **Brand:** nuie Choice **Description:** nuie choice Cartegena Brushed Brass Mono Basin Mixer With Push Button Waste



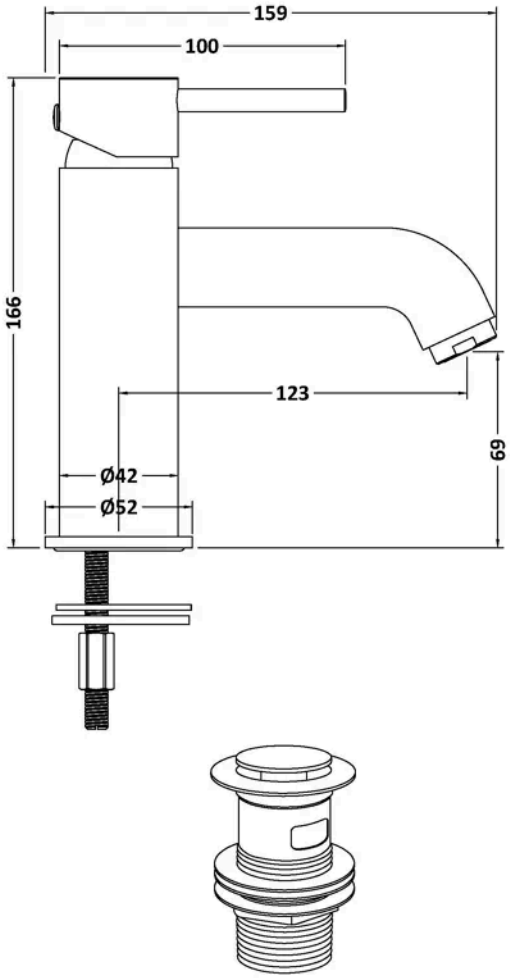

Product Dimensions

Product	166 x 52 x 159mm (H x W x D)
Packaged	80 x 260 x 175mm (H x W x D)
Outer Box	420 x 280 x 370mm (H x W x D)
Nett Weight	1 kg
Packaged Weight	1.2 kg

Packaging Details

Box Qty	1
Label Size (mm)	50 x 100
Label Colour	White
Label Qty	1.0000

Product Details

Country of Origin	China
Product Material	Brass,Plastic
Control Type	Manual
Waste Type	Push Button
WRAS Approved	No
Valve/Cartridge Type	Single Lever Cartridge
Colour/Finish	Brushed Brass
Mount Type	Deck
Style	Contemporary
Handle Type	Lever/Round
TMV2 Approved	No
TMV3 Approved	No
Handset Included	Yes
Min Operating Pressure	0.2 Bar
Tap Spout Height	69 mm
Tap Spout Projection	123 mm
Tap Tails Included	Yes
Valve / Cartridge Type	Single Lever Cartridge
Waste Included	Yes

© ROXOR Group