Sales Code: BU18132WBG

Barcode: 5056817724153

Brand: nuie Kitchens

Description: nuie 795mm x 460mm x 220mm Fireclay White Single Bowl Butler Sink With Ledge, Wire Grid And Chopping Board



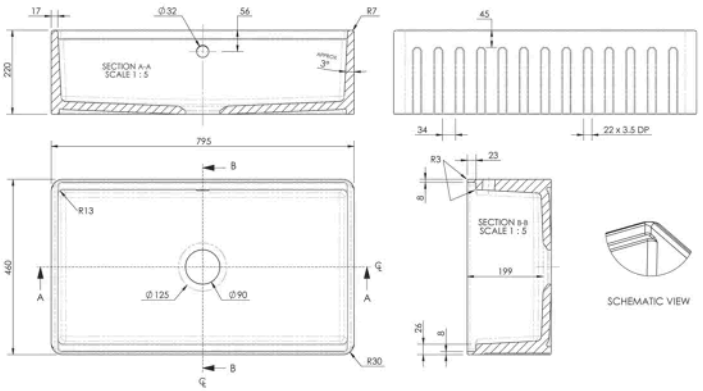

Product Dimensions

Product	220 x 795 x 460mm (H x W x D)
Packaged	230 x 825 x 480mm (H x W x D)
Nett Weight	42.33 kg
Packaged Weight	42.33 kg

Packaging Details

Box Qty	3

Product Details

Country of Origin	United Arab Emirates
Product Material	Fireclay
Colour/Finish	White
Style	Traditional
Fixings Included	No
Bottle Trap Included	No
Cupc Approval	Yes
Inner Bowl Depth	480 mm
Inner Bowl Height	230 mm
Inner Bowl Width	825 mm
No. Of Tapholes	No Tapholes
Number Of Bowls	1
Overflow Cover Included	No
Overflow Included	Yes
Sink Thickness	22 mm
Tap Included	No
Waste Included	No
Waste Size Required	90mm

© ROXOR Group

Sales Code: AE303 **Barcode:** 5056211884170 **Brand:** Fireclay Sinks **Description:** nuie Stainless Steel Single Bowl Kitchen Sink Wire Grid

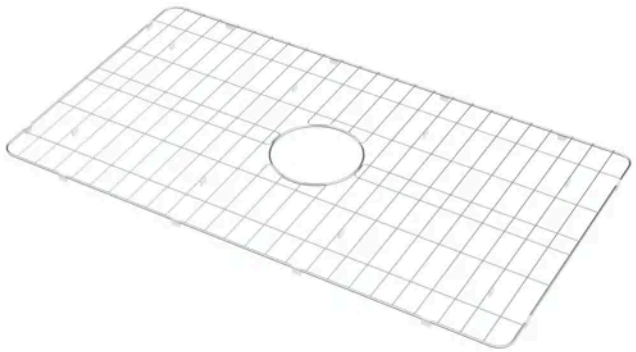

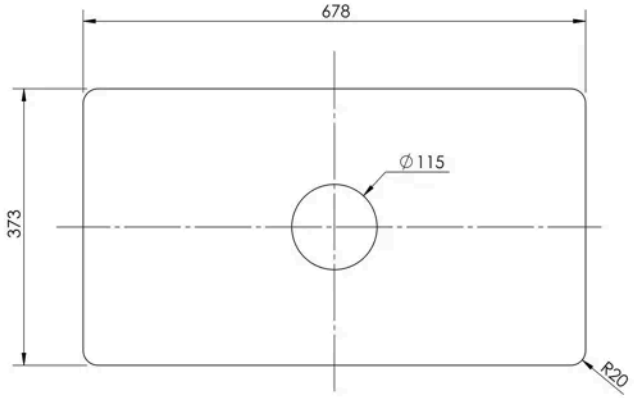

Product Dimensions

Product	8 x 373 x 373mm (H x W x D)
Packaged	10 x 762 x 471mm (H x W x D)
Nett Weight	0.5 kg
Packaged Weight	0.5 kg

Packaging Details

Box Qty	1

Product Details

Country of Origin	China
Product Material	Stainless Steel
Colour/Finish	Chrome
Style	Traditional
Overflow Included	No
Tap Included	No

© ROXOR Group

Sales Code: AE308 **Barcode:** 5056211884194 **Brand:** OEM **Description:** nuie Kitchen Sink Walnut Chopping Board



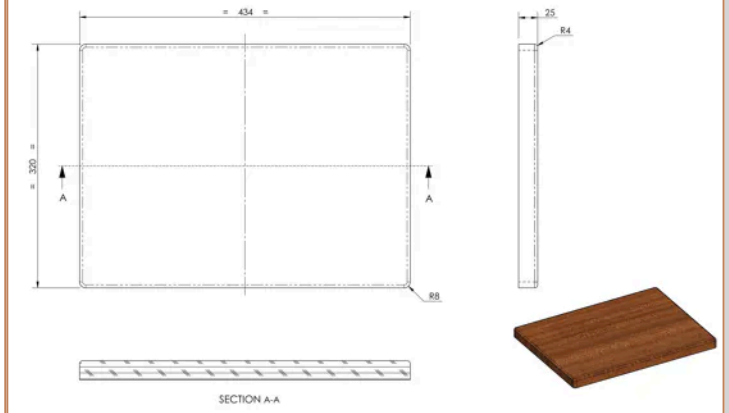

Product Dimensions

Product	25 x 320 x 320mm (H x W x D)
Packaged	25 x 320 x 434mm (H x W x D)
Nett Weight	2.03 kg
Packaged Weight	2.03 kg

Packaging Details

Box Qty	1

Product Details

Country of Origin	United Arab Emirates
Product Material	Walnut
Colour/Finish	Walnut
Style	Traditional

© ROXOR Group

Sales Code: BU18132 **Barcode:** 5056678471388 **Brand:** nuie Kitchens **Description:** nuie 795mm x 460mm x 220mm Fireclay White Single Bowl Butler Sink With Ledge



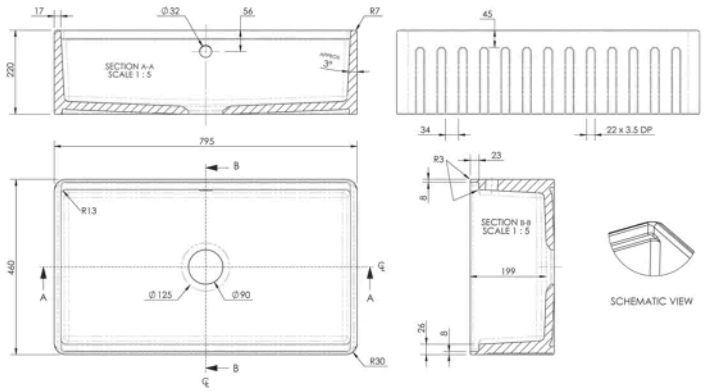

Product Dimensions

Product	220 x 795 x 460mm (H x W x D)
Packaged	230 x 825 x 480mm (H x W x D)
Nett Weight	39.3 kg
Packaged Weight	39.8 kg

Packaging Details

Box Qty	1
Label Colour	White

Product Details

Country of Origin	United Arab Emirates
Product Material	Fireclay
Colour/Finish	White
Style	Traditional
Fixings Included	No
Bottle Trap Included	No
Cupc Approval	Yes
Cupc Approval Number	311189
Inner Bowl Depth	480 mm
Inner Bowl Height	230 mm
Inner Bowl Width	825 mm
No. Of Tapholes	No Tapholes
Number Of Bowls	1
Overflow Cover Included	No
Overflow Included	Yes
Sink Thickness	22 mm
Tap Included	No
Waste Included	No
Waste Size Required	90mm

© ROXOR Group