Sales Code: BTSVT103 **Barcode:** 5055275867938 **Brand:** Hudson Reed **Description:** Old London Topaz Black Triple Exposed Shower Valve and Spout



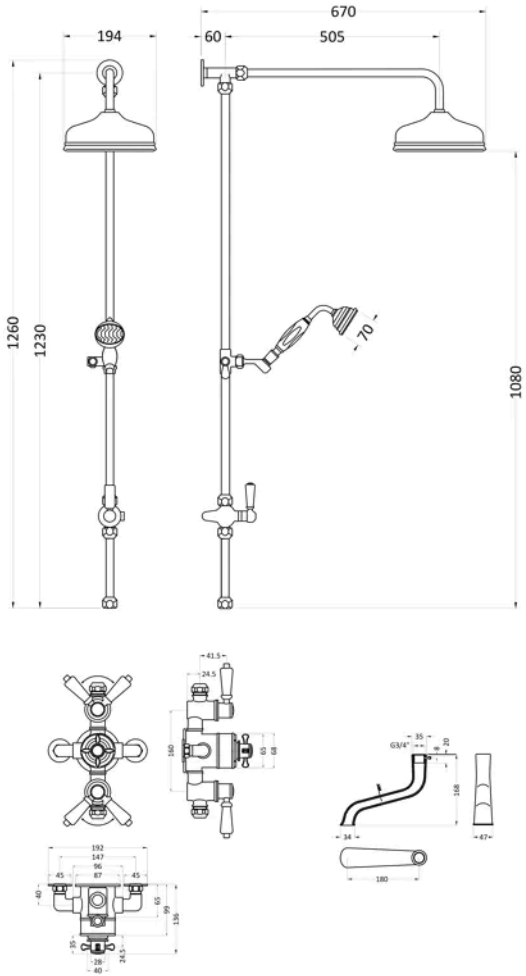

Product Dimensions

Product	1440 x 195 x 667mm (H x W x D)
Packaged	175 x 260 x 1100mm (H x W x D)
Nett Weight	3.1 kg
Packaged Weight	3.6 kg

Packaging Details

Label Size (mm)	50 x 100
Label Colour	White
Label Qty	1.0000

Product Details

Country of Origin	China
Product Material	Brass
Control Type	Manual
WRAS Approved	No
Valve/Cartridge Type	1/4 Turn
Colour/Finish	Chrome
Mount Type	Wall Hung
Style	Traditional
Handle Type	Crosshead/Lever
TMV2 Approved	No
TMV3 Approved	No
Pipe Centres	150
Handset Included	Yes
Head Included	Yes
Min Operating Pressure	0.5 Bar
No. Outlets	2.0000
Valve / Cartridge Type	1/4 Turn

© ROXOR Group