Sales Code: BTSVT002 **Barcode:** 5055275830925 **Brand:** Hudson Reed **Description:** Old London Topaz Twin Concealed Shower Valve



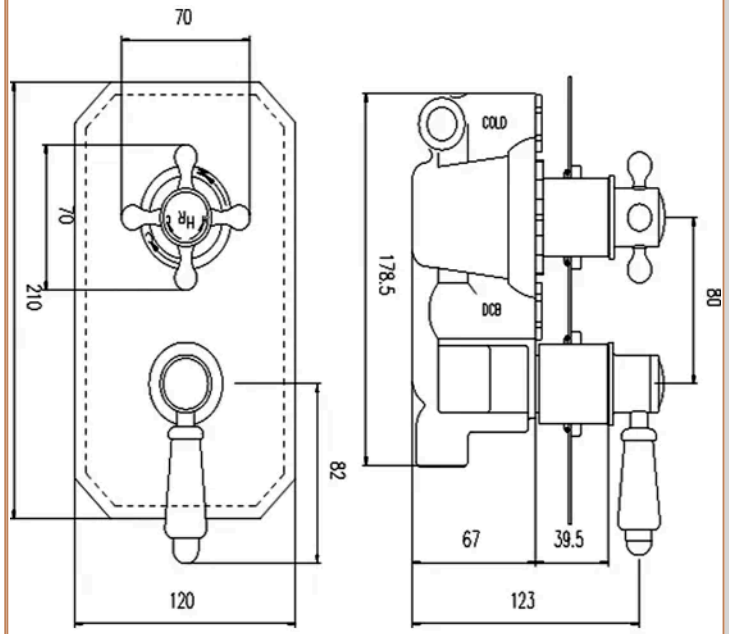

Product Dimensions

Product	230 x 120 x 135mm (H x W x D)
Packaged	110 x 240 x 250mm (H x W x D)
Nett Weight	2.8 kg
Packaged Weight	3 kg

Packaging Details

Label Size (mm)	50 x 100
Label Colour	White
Label Qty	1.0000

Product Details

Country of Origin	China
Product Material	Brass Abs
Control Type	Manual
WRAS Approved	Yes
Valve/Cartridge Type	1/4 Turn
Colour/Finish	Chrome
Mount Type	Recessed/Wall
Style	Traditional
Handle Type	Crosshead/Lever
TMV2 Approved	Yes
TMV3 Approved	No
Handset Included	No
Head Included	No
Min Operating Pressure	0.1 Bar
No. Outlets	1.0000
Outlet Elbow Supplied	No
Tmv2 Approval Number	2603035
Valve / Cartridge Type	1/4 Turn
Wras Approval No	250602040

© ROXOR Group