Sales Code: BSS028 **Barcode:** 5056462639413 **Brand:** BC Designs **Description:** BC Designs 800mm Chrome Bath Screen



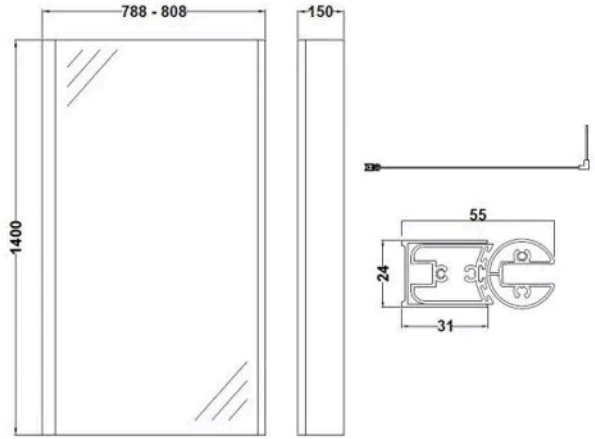

Product Dimensions

Product	1400 x 808 x 24mm (H x W x D)
Packaged	55 x 840 x 1460mm (H x W x D)
Nett Weight	18.5 kg
Packaged Weight	18.7 kg

Product Details

Country of Origin	China
Product Material	Aluminium
Colour/Finish	Chrome
Style	Contemporary
Easy Clean	No
Ce Certified	Yes
Declaration Of Performance	Yes
Easy Fit	No
Enclosure Design	Semi-Frameless
Frame Finish	Polished Chrome
Glass Thickness	6 mm
Handles Included	No
Ukca Certified	No

© ROXOR Group