Sales Code: BEX225P

Barcode: 5056817714611

Brand: Old London

Description: Old London Bexley Cool Grey 600mm 1 Drawer Floor Standing Vanity Unit With 1 Tap Hole White Stone Basin



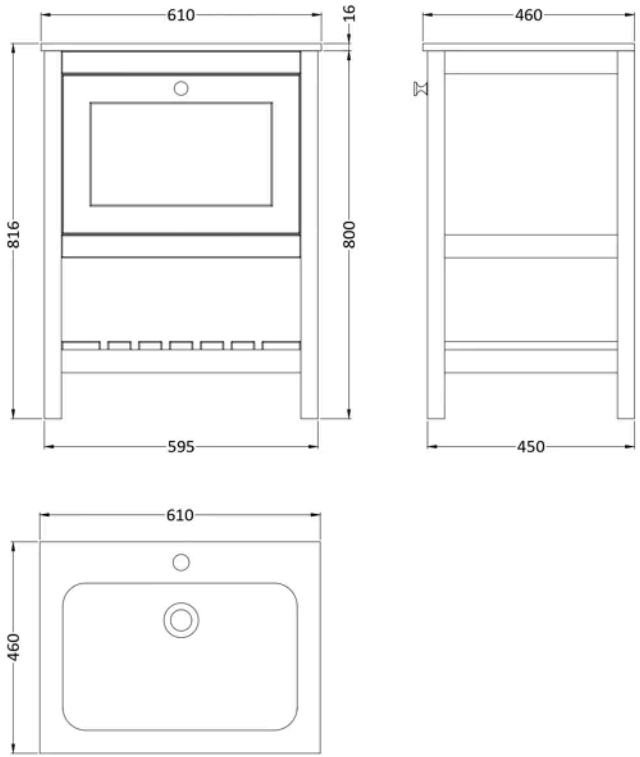

Product Dimensions

Product	816 x 610 x 460mm (H x W x D)
Packaged	820 x 615 x 470mm (H x W x D)
Nett Weight	33.5 kg
Packaged Weight	34 kg

Packaging Details

Box Qty	2

Product Details

Country of Origin	Republic of Ireland
Product Material	Mdf Vinyl Smooth Matt,Stone
Colour/Finish	Cool Grey
Mount Type	Floor
Style	Traditional
Handle Type	Knob
Construction Method	Cam & Wood Dowel
Construction Type	Rigid
Drawer Type	80mm High Metal S/C Inc Gallery
Fascia Finish	Mdf Vinyl Smooth Matt
Fsc Certified	Yes
Handles Included	Yes
Inner Bowl Depth	320 mm
Inner Bowl Width	510 mm
Leg Set Included	Yes
Material Thickness	18 mm
No. Drawers	1
No. Of Tapholes	1
No. Shelves	1
Number Of Bowls	1
Number Of Shelves	1
Overflow Cover Included	Yes
Overflow Included	Yes
Tap Included	No
Waste Included	No
Waste Shroud	Yes

© ROXOR Group

Sales Code: BEX225N **Barcode:** 5056678497661 **Brand:** Old London **Description:** Old London Bexley 600mm Cool Grey Floor Standing Vanity Unit



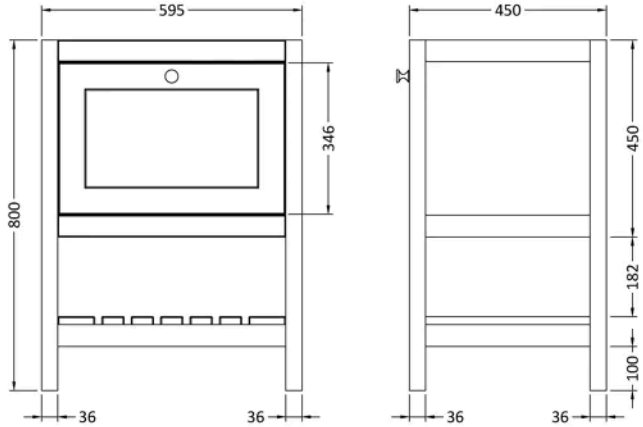

Product Dimensions

Packaged	820 x 615 x 470mm (H x W x D)
Nett Weight	20.5 kg
Packaged Weight	21 kg

Packaging Details

Box Qty	1

Product Details

Country of Origin	Republic of Ireland
Product Material	Mdf Vinyl Smooth Matt
Colour/Finish	Cool Grey
Mount Type	Floor
Style	Traditional
Handle Type	Knob
Construction Method	Cam & Wood Dowel
Construction Type	Rigid
Drawer Type	80mm High Metal S/C Inc Gallery
Fascia Finish	Mdf Vinyl Smooth Matt
Handles Included	Yes
Material Thickness	18 mm
No. Drawers	1
No. Shelves	1
Number Of Shelves	1
Waste Shroud	Yes

© ROXOR Group

Sales Code: SBM103 **Barcode:** 5056678424360 **Brand:** nuie **Description:** 600mm 1 Tap Hole White Stone Furniture Basin



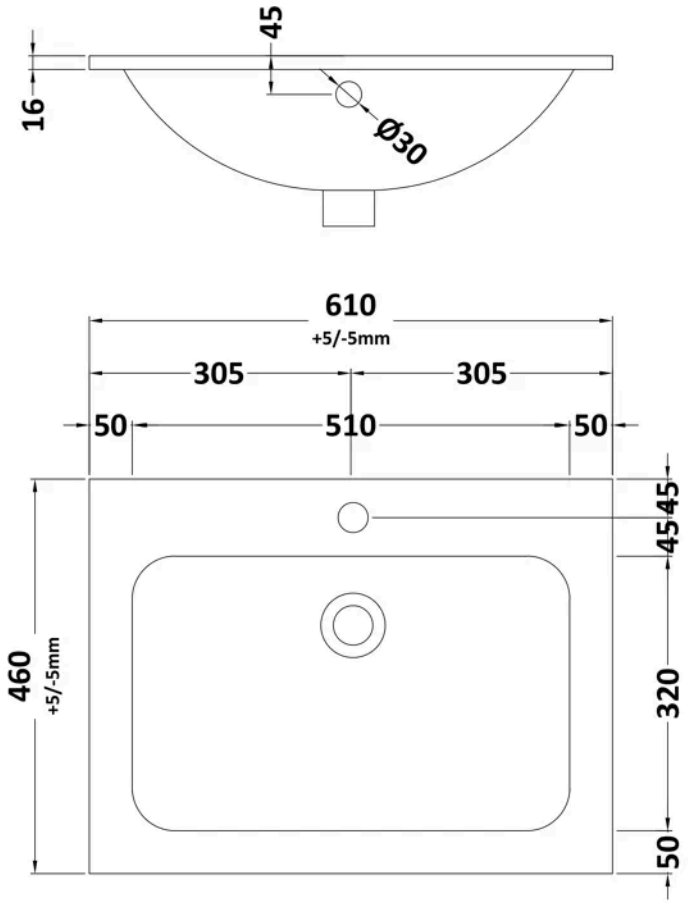

Product Dimensions

Product	610 x 460mm (W x D)
Packaged	200 x 675 x 530mm (H x W x D)
Nett Weight	13.5 kg
Packaged Weight	14 kg

Packaging Details

Box Qty	1

Product Details

Country of Origin	China
Product Material	Stone
Colour/Finish	Matt White
Style	Contemporary
Bottle Trap Included	No
Ce Certified	Yes
Inner Bowl Depth	320 mm
Inner Bowl Height	128 mm
Inner Bowl Width	510 mm
No. Of Tapholes	1
Number Of Bowls	1
Overflow Cover Included	Yes
Overflow Included	Yes
Tap Included	No
Waste Included	No

© ROXOR Group