Sales Code: BEX225M

Barcode: 5056817714413

Brand: Old London

Description: Old London Bexley Cool Grey 600mm 1 Drawer Floor Standing Vanity Unit With 3 Tap Holes Contemporary Fireclay Basin



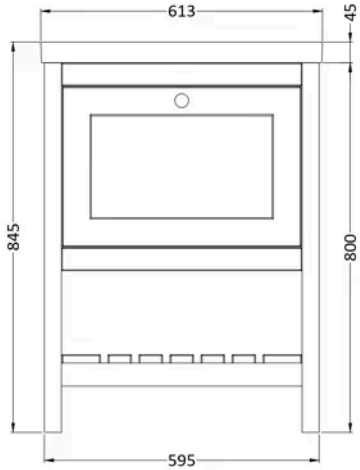

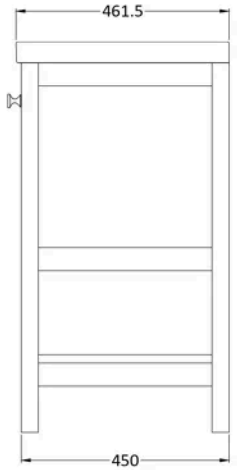

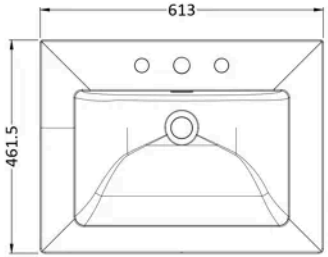

Product Dimensions

Product	845 x 613 x 462mm (H x W x D)
Packaged	820 x 615 x 470mm (H x W x D)
Nett Weight	37 kg
Packaged Weight	37.5 kg

Packaging Details

Box Qty	2

Product Details

Country of Origin	Republic of Ireland
Product Material	Fireclay,Mdf Vinyl Smooth Matt
Colour/Finish	Cool Grey
Mount Type	Floor
Style	Traditional
Handle Type	Knob
Construction Method	Cam & Wood Dowel
Construction Type	Rigid
Drawer Type	80mm High Metal S/C Inc Gallery
Fascia Finish	Mdf Vinyl Smooth Matt
Fsc Certified	Yes
Handles Included	Yes
Inner Bowl Depth	292 mm
Inner Bowl Height	135 mm
Inner Bowl Width	463 mm
Leg Set Included	Yes
Material Thickness	18 mm
No. Drawers	1
No. Of Tapholes	3
No. Shelves	1
Number Of Bowls	1
Number Of Shelves	1
Overflow Cover Included	Yes
Overflow Included	Yes
Tap Included	No
Waste Included	No
Waste Shroud	Yes

© ROXOR Group

Sales Code: BEX225N **Barcode:** 5056678497661 **Brand:** Old London **Description:** Old London Bexley 600mm Cool Grey Floor Standing Vanity Unit



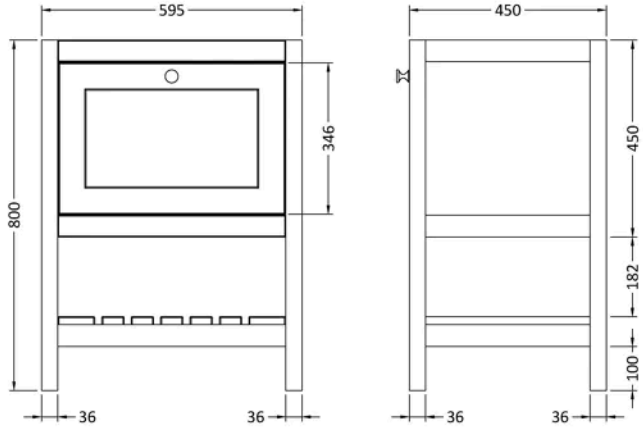

Product Dimensions

Packaged	820 x 615 x 470mm (H x W x D)
Nett Weight	20.5 kg
Packaged Weight	21 kg

Packaging Details

Box Qty	1

Product Details

Country of Origin	Republic of Ireland
Product Material	Mdf Vinyl Smooth Matt
Colour/Finish	Cool Grey
Mount Type	Floor
Style	Traditional
Handle Type	Knob
Construction Method	Cam & Wood Dowel
Construction Type	Rigid
Drawer Type	80mm High Metal S/C Inc Gallery
Fascia Finish	Mdf Vinyl Smooth Matt
Handles Included	Yes
Material Thickness	18 mm
No. Drawers	1
No. Shelves	1
Number Of Shelves	1
Waste Shroud	Yes

© ROXOR Group

Sales Code: CBM633 **Barcode:** 5056678485248 **Brand:** nuie **Description:** 3 Tap Hole 600mm Contemporary Fireclay Basin



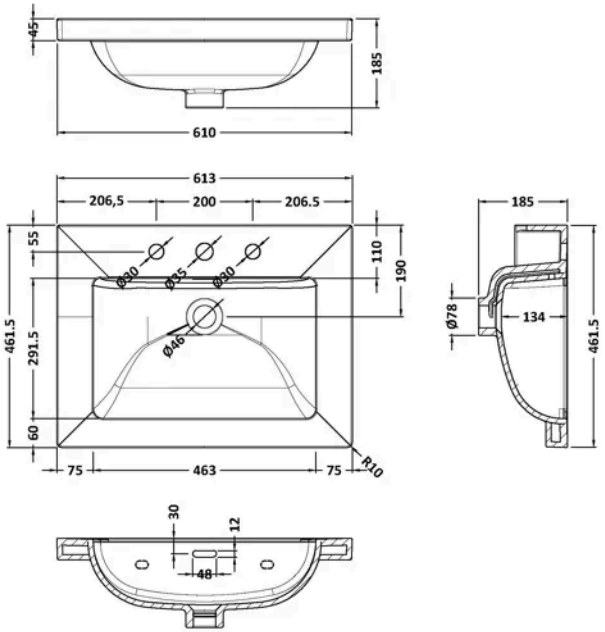

Product Dimensions

Product	45 x 610 x 460mm (H x W x D)
Packaged	490 x 650 x 220mm (H x W x D)
Nett Weight	17 kg
Packaged Weight	17 kg

Packaging Details

Box Qty	1
Label Size (mm)	100 x 50
Label Colour	White
Label Qty	2.0000

Product Details

Country of Origin	United Arab Emirates
Product Material	Fireclay
Colour/Finish	White
Style	Contemporary
Fixings Included	No
Bottle Trap Included	No
Ce Certified	Yes
Inner Bowl Depth	300 mm
Inner Bowl Height	135 mm
Inner Bowl Width	480 mm
No. Of Tapholes	3
Number Of Bowls	1
Overflow Cover Included	No
Overflow Included	Yes
Tap Included	No
Waste Included	No

© ROXOR Group