Sales Code: BEX223A

Barcode: 5056678422854

Brand: Old London

Description: Old London Bexley Cool Grey 500mm 1 Drawer Floor Standing Vanity Unit With 1 Tap Hole Basin



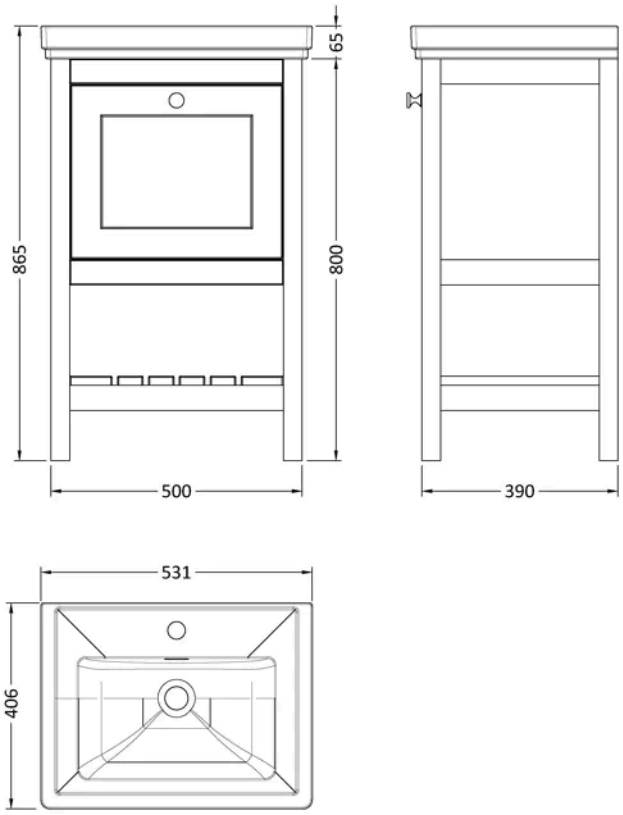

Product Dimensions

Product	865 x 531 x 406mm (H x W x D)
Packaged	820 x 520 x 410mm (H x W x D)
Nett Weight	30.5 kg
Packaged Weight	31 kg

Packaging Details

Box Qty	2

Product Details

Country of Origin	Republic of Ireland
Product Material	Mdf Vinyl Smooth Matt
Colour/Finish	Cool Grey
Mount Type	Floor
Style	Traditional
Handle Type	Knob
Construction Method	Cam & Wood Dowel
Construction Type	Rigid
Drawer Type	80mm High Metal S/C Inc Gallery
Fascia Finish	Mdf Vinyl Smooth Matt
Fsc Certified	Yes
Handles Included	Yes
Inner Bowl Height	136 mm
Leg Set Included	Yes
Material Thickness	18 mm
No. Drawers	1
No. Of Tapholes	1
No. Shelves	1
Number Of Bowls	1
Number Of Shelves	1
Overflow Included	Yes
Tap Included	No
Waste Included	No
Waste Shroud	Yes

© ROXOR Group

Sales Code: BEX223N **Barcode:** 5056678497654 **Brand:** Old London **Description:** Old London Bexley 500mm Cool Grey Floor Standing Vanity Unit



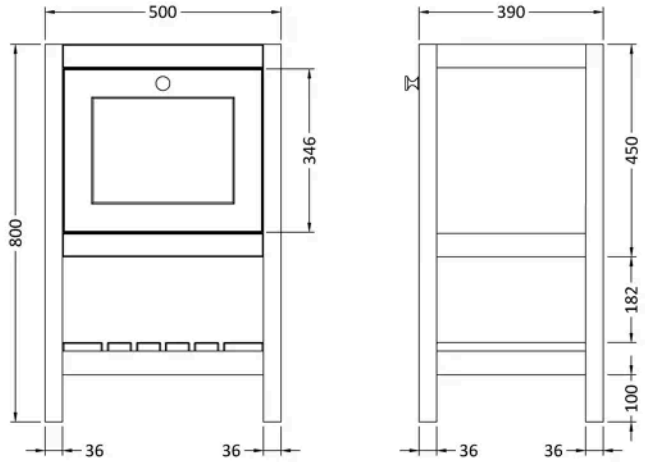

Product Dimensions

Packaged	820 x 520 x 410mm (H x W x D)
Nett Weight	17.5 kg
Packaged Weight	18 kg

Packaging Details

Box Qty	1

Product Details

Country of Origin	Republic of Ireland
Product Material	Mdf Vinyl Smooth Matt
Colour/Finish	Cool Grey
Mount Type	Floor
Style	Traditional
Handle Type	Knob
Construction Method	Cam & Wood Dowel
Construction Type	Rigid
Drawer Type	80mm High Metal S/C Inc Gallery
Fascia Finish	Mdf Vinyl Smooth Matt
Handles Included	Yes
Material Thickness	18 mm
No. Drawers	1
No. Shelves	1
Number Of Shelves	1
Waste Shroud	Yes

© ROXOR Group

Sales Code: CBM502 **Barcode:** 5056462643632 **Brand:** nuie **Description:** 1 Tap Hole 500mm Traditional Fireclay Basin



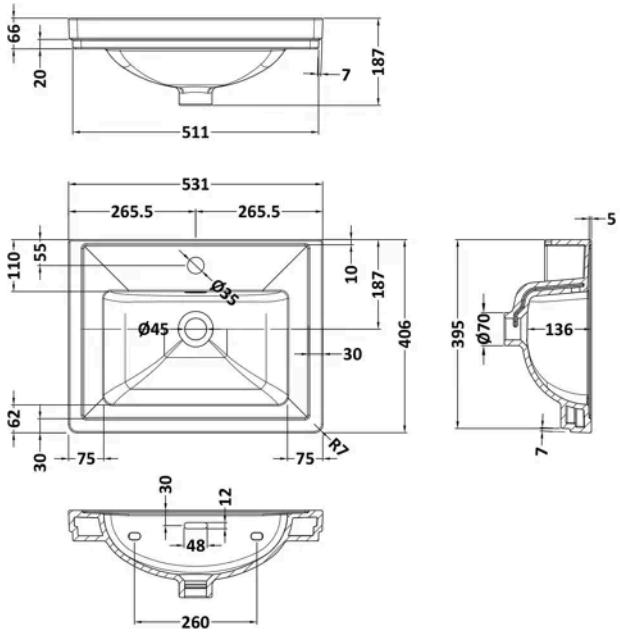

Product Dimensions

Product	187 x 531 x 406mm (H x W x D)
Packaged	430 x 550 x 220mm (H x W x D)
Nett Weight	13.5 kg
Packaged Weight	13.5 kg

Packaging Details

Box Qty	1

Product Details

Country of Origin	United Arab Emirates
Product Material	Fireclay
Colour/Finish	White
Style	Traditional
Ce Certified	Yes
Inner Bowl Height	136 mm
No. Of Tapholes	1
Number Of Bowls	1
Overflow Included	Yes
Tap Included	No
Waste Included	No

© ROXOR Group