Sales Code: BEX127P

Barcode: 5056817714680

Brand: Old London

Description: Old London Bexley Pure White 800mm 1 Drawer Floor Standing Vanity Unit With 1 Tap Hole White Stone Basin



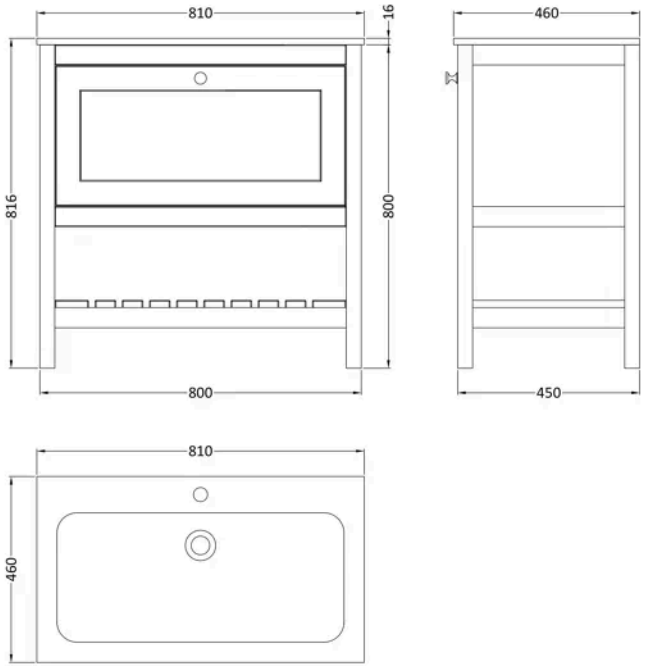

Product Dimensions

Product	816 x 810 x 460mm (H x W x D)
Packaged	820 x 815 x 470mm (H x W x D)
Nett Weight	41 kg
Packaged Weight	41.5 kg

Packaging Details

Box Qty	2

Product Details

Country of Origin	Republic of Ireland
Product Material	Mdf Vinyl Smooth Matt,Stone
Colour/Finish	Pure White
Mount Type	Floor
Style	Traditional
Handle Type	Knob
Construction Method	Cam & Wood Dowel
Construction Type	Rigid
Drawer Type	80mm High Metal S/C Inc Gallery
Fascia Finish	Mdf Vinyl Smooth Matt
Fsc Certified	Yes
Handles Included	Yes
Inner Bowl Depth	320 mm
Inner Bowl Width	710 mm
Leg Set Included	Yes
Material Thickness	18 mm
No. Drawers	1
No. Of Tapholes	1
No. Shelves	1
Number Of Bowls	1
Number Of Shelves	1
Overflow Cover Included	Yes
Overflow Included	Yes
Tap Included	No
Waste Included	No
Waste Shroud	Yes

© ROXOR Group

Sales Code: BEX127N **Barcode:** 5056678497647 **Brand:** Old London **Description:** Old London Bexley 800mm Pure White Floor Standing Vanity Unit



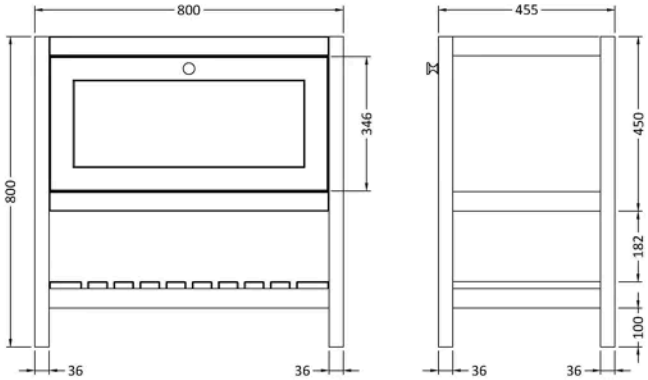

Product Dimensions

Packaged	820 x 820 x 475mm (H x W x D)
Nett Weight	25.5 kg
Packaged Weight	26 kg

Packaging Details

Box Qty	1

Product Details

Country of Origin	Republic of Ireland
Product Material	Mdf Vinyl Smooth Matt
Colour/Finish	Pure White
Mount Type	Floor
Style	Traditional
Handle Type	Knob
Construction Method	Cam & Wood Dowel
Construction Type	Rigid
Drawer Type	80mm High Metal S/C Inc Gallery
Fascia Finish	Mdf Vinyl Smooth Matt
Handles Included	Yes
Material Thickness	18 mm
No. Drawers	1
No. Shelves	1
Number Of Shelves	1
Waste Shroud	Yes

© ROXOR Group

Sales Code: SBM105 **Barcode:** 5056678424346 **Brand:** nuie **Description:** 800mm 1 Tap Hole White Stone Furniture Basin



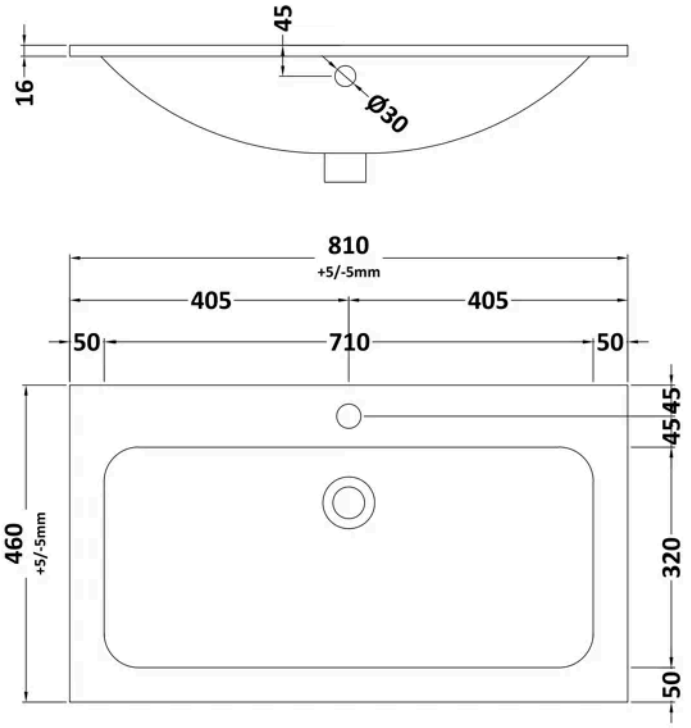

Product Dimensions

Product	810 x 460mm (W x D)
Packaged	200 x 875 x 530mm (H x W x D)
Nett Weight	16 kg
Packaged Weight	16.5 kg

Packaging Details

Box Qty	1

Product Details

Country of Origin	China
Product Material	Stone
Colour/Finish	Matt White
Style	Contemporary
Bottle Trap Included	No
Ce Certified	Yes
Inner Bowl Depth	320 mm
Inner Bowl Height	128 mm
Inner Bowl Width	710 mm
No. Of Tapholes	1
Number Of Bowls	1
Overflow Cover Included	Yes
Overflow Included	Yes
Tap Included	No
Waste Included	No

© ROXOR Group