Sales Code: BCSW813 **Barcode:** 5056817797751 **Brand:** BC Designs **Description:** BC Sanitan Brushed Brass 90mm Basket Strainer Kitchen Sink Fireclay Waste



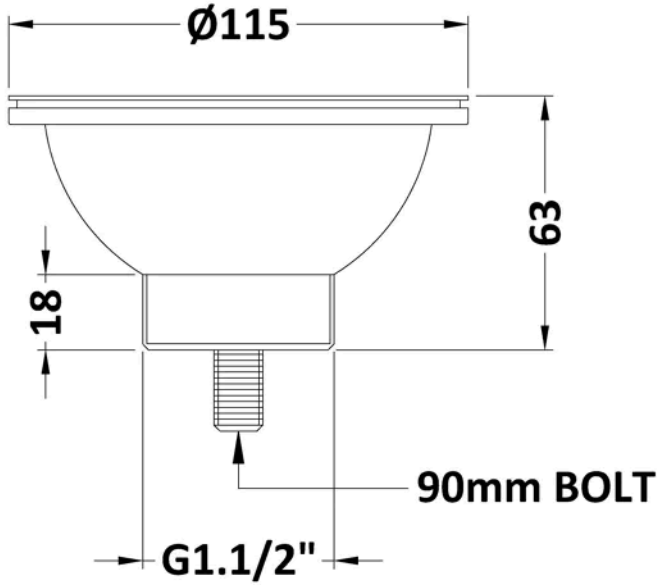

Product Dimensions

Product	63 x 115 x 115mm (H x W x D)
Packaged	100 x 122 x 122mm (H x W x D)
Nett Weight	0.28 kg
Packaged Weight	0.28 kg

Packaging Details

Box Qty	1

Product Details

Country of Origin	China
Product Material	Stainless Steel
Waste Type	Basket Strainer
Colour/Finish	Brushed Brass
Style	Traditional
Overflow Cover Included	No
Waste Shape	Round

© ROXOR Group