**Sales Code:** BCSW313 **Barcode:** 5056817797744 **Brand:** BC Designs **Description:** BC Sanitan Chrome 90mm Basket Strainer Kitchen Sink Fireclay Waste



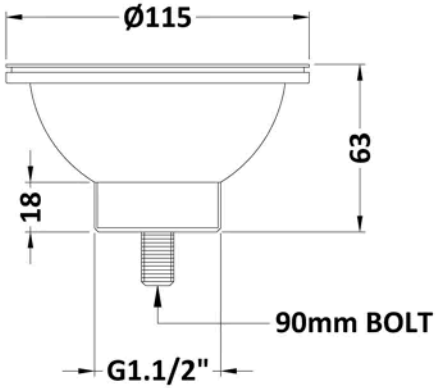


## Product Dimensions

| | |
|---|---|
| Product | 63 x 115 x 115mm (H x W x D) |
| Packaged | 100 x 122 x 122mm (H x W x D) |
| Nett Weight | 0.28 kg |
| Packaged Weight | 0.28 kg |

## Packaging Details

| | |
|---|---|
| Box Qty | 1 |

## Product Details

| | |
|---|---|
| Country of Origin | China |
| Product Material | Stainless Steel |
| Waste Type | Basket Strainer |
| Colour/Finish | Chrome |
| Style | Traditional |
| Overflow Cover Included | No |
| Waste Shape | Round |

© ROXOR Group