Sales Code: BCSUFAGA32D

Barcode: 5056817797577

Brand: BC Designs

Description: BC Sanitan 795mm x 500mm x 220mm Fireclay White Fluted Double Bowl Traditional Thick Edge Butler Sink



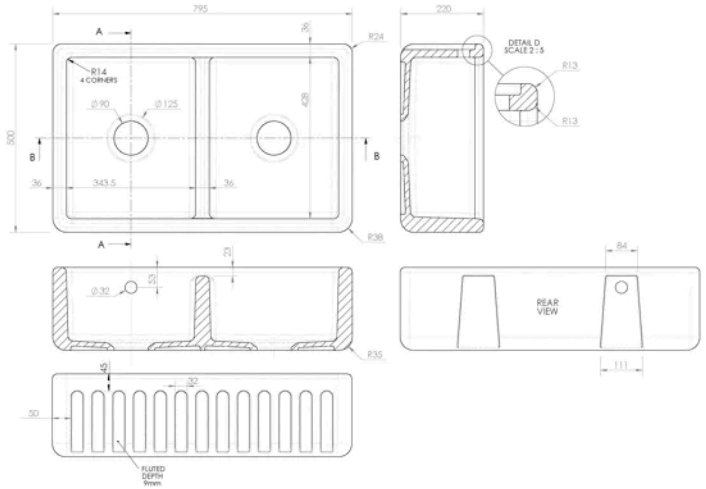

Product Dimensions

Product	220 x 795 x 500mm (H x W x D)
Packaged	225 x 825 x 520mm (H x W x D)
Nett Weight	57.5 kg
Packaged Weight	58 kg

Packaging Details

Label Colour	White

Product Details

Country of Origin	United Arab Emirates
Product Material	Fireclay
Colour/Finish	White
Style	Traditional
Fixings Included	No
Cupc Approval	Yes
Cupc Approval Number	311189
Inner Bowl Depth	520 mm
Inner Bowl Height	225 mm
Inner Bowl Width	825 mm
No. Of Tapholes	No Tapholes
Number Of Bowls	2
Overflow Cover Included	Yes
Overflow Included	Yes
Sink Thickness	36 mm
Tap Included	No
Waste Included	No
Waste Size Required	90mm

© ROXOR Group