Sales Code: BCSUAGA24

Barcode: 5056817754426

Brand: BC Designs

Description: BC Sanitan 595mm x 450mm x 220mm Fireclay White Single Bowl Traditional Thick Edge Butler Sink



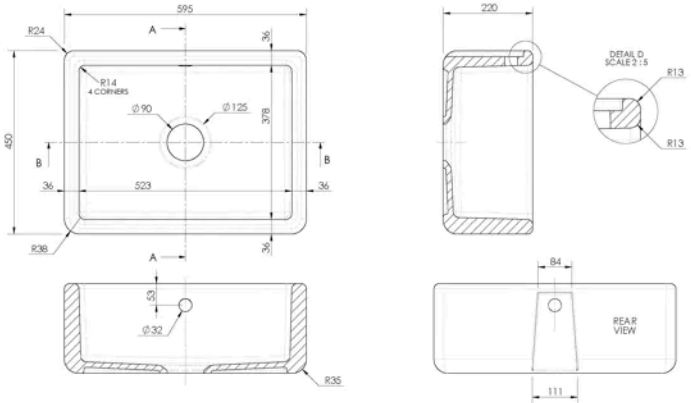

Product Dimensions

Product	220 x 595 x 450mm (H x W x D)
Packaged	225 x 620 x 460mm (H x W x D)
Nett Weight	40 kg
Packaged Weight	40.5 kg

Product Details

Country of Origin	United Arab Emirates
Product Material	Fireclay
Colour/Finish	White
Style	Traditional
Fixings Included	No
Bottle Trap Included	No
Cupc Approval	Yes
Inner Bowl Depth	460 mm
Inner Bowl Height	225 mm
Inner Bowl Width	620 mm
No. Of Tapholes	No Tapholes
Number Of Bowls	1
Overflow Cover Included	No
Overflow Included	Yes
Sink Thickness	36 mm
Tap Included	No
Waste Included	No
Waste Size Required	90mm

© ROXOR Group