Sales Code: BCSBS105BP

Barcode: 5056883744659

Brand: BC Designs

Description: BC Sanitan Ornate Brushed Pewter Basin Stand - For use with 540mm/640mm Basin



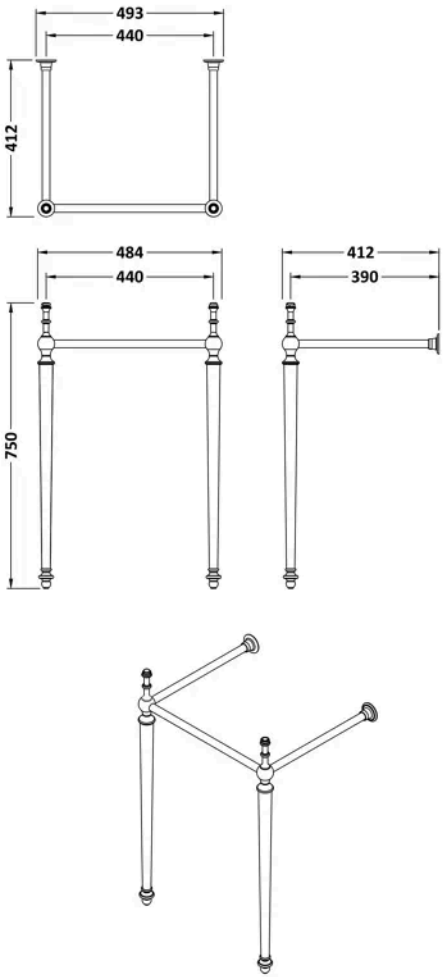

Product Dimensions

Product	750 x 493 x 412mm (H x W x D)
Packaged	750 x 484 x 412mm (H x W x D)
Nett Weight	5.95 kg
Packaged Weight	5.95 kg

Packaging Details

Label Size (mm)	50 x 100
Label Colour	White
Label Qty	2.0000

Product Details

Country of Origin	China
Product Material	Stainless Steel
Colour/Finish	Brushed Pewter
Style	Traditional

© ROXOR Group

Sales Code: BCSBS702 **Barcode:** 5056883738207 **Brand:** BC Designs **Description:** BC Sanitan Traditional Basin Stand

Product Image Not Available

Technical Drawing Not Available

Product Dimensions

Packaged	90 x 295 x 600mm (H x W x D)
Nett Weight	3.58 kg
Packaged Weight	3.95 kg

© ROXOR Group

Sales Code: BCSBSE701 **Barcode:** 5056883738221 **Brand:** BC Designs **Description:** BC Sanitan Orante Pipe Extension Kit (640mm)

Product Image Not Available

Technical Drawing Not Available

Product Dimensions

Packaged	140 x 320 x 595mm (H x W x D)
Nett Weight	2 kg
Packaged Weight	2 kg

© ROXOR Group