Sales Code: BCSBS105 **Barcode:** 5056883739389 **Brand:** BC Designs **Description:** BC Sanitan Ornate Chrome Basin Stand - For use with 540mm/640mm Basin



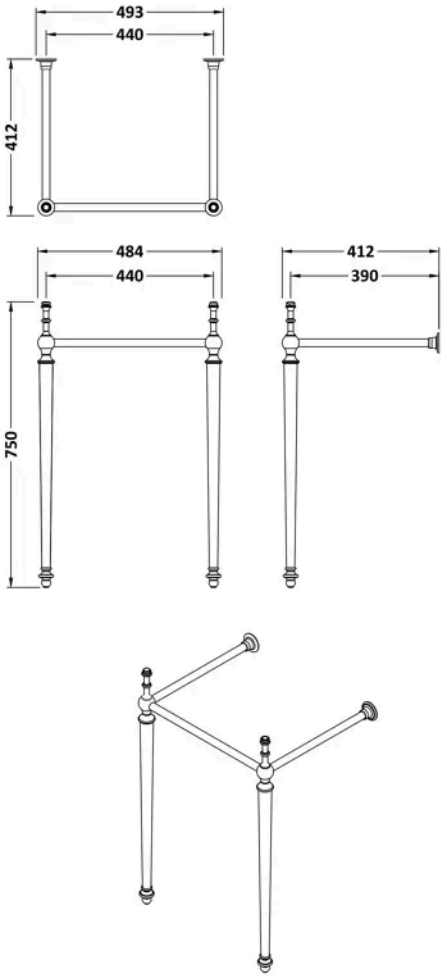

Product Dimensions

Packaged	750 x 484 x 412mm (H x W x D)
Nett Weight	5.95 kg
Packaged Weight	5.95 kg

© ROXOR Group