**Sales Code:** BCSBS003G **Barcode:** 5056883744338 **Brand:** BC Designs **Description:** BC Sanitan Ornate Gold Towel Rail For Basin Stand



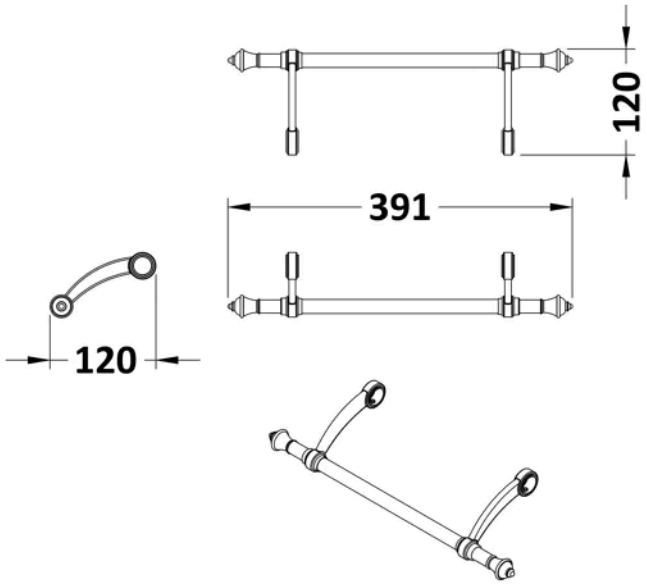


## Product Dimensions

| | |
|---|---|
| Product | 391 x 120mm (W x D) |
| Packaged | 391 x 120 x 120mm (H x W x D) |
| Nett Weight | 0.8 kg |
| Packaged Weight | 0.8 kg |

## Product Details

| | |
|---|---|
| Country of Origin | China |
| Product Material | Brass |
| Colour/Finish | Gold |
| Style | Traditional |

© ROXOR Group