**Sales Code:** BCSBS003BP **Barcode:** 5056883738245 **Brand:** BC Designs **Description:** BC Sanitan Towel Rail For Ornate Brushed Pewter Basin Stand



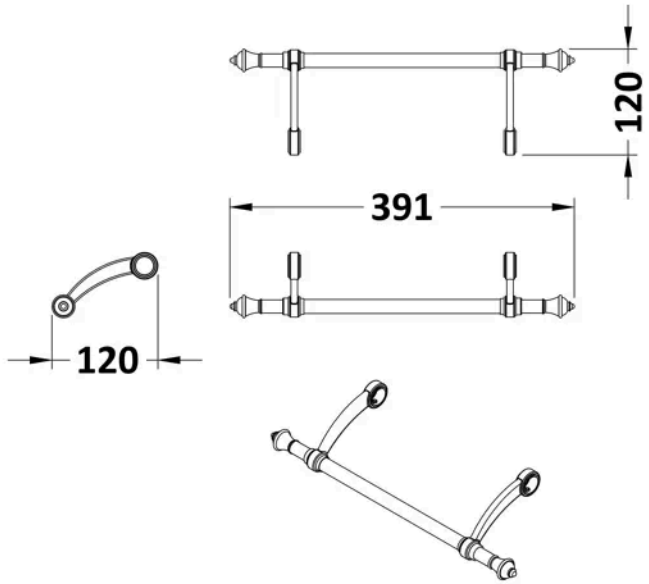


## Product Dimensions

| | |
|---|---|
| Product | 391 x 120mm (W x D) |
| Packaged | 31 x 300 x 480mm (H x W x D) |
| Nett Weight | 0.76 kg |
| Packaged Weight | 0.81 kg |

## Product Details

| | |
|---|---|
| Country of Origin | China |
| Product Material | Brass |
| Colour/Finish | Brushed Pewter |
| Style | Traditional |

© ROXOR Group