Sales Code: BCSBS003BG **Barcode:** 5056883744345 **Brand:** BC Designs **Description:** BC Sanitan Ornate Brushed Gold Towel Rail For Basin Stand



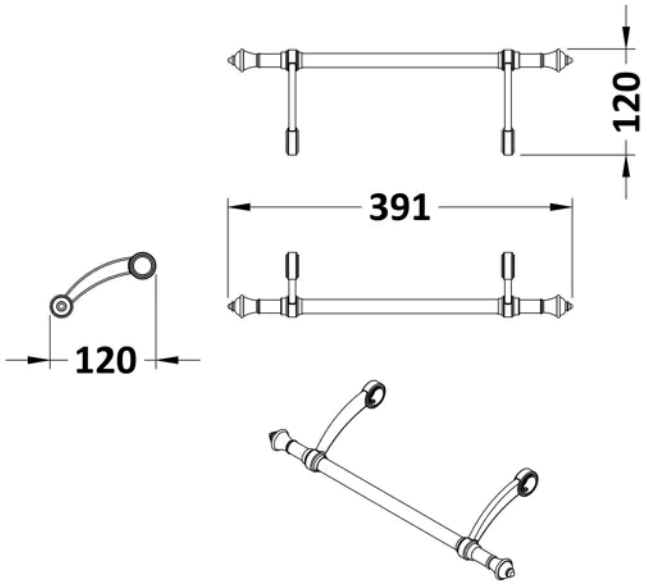

Product Dimensions

Product	391 x 120mm (W x D)
Packaged	391 x 120 x 120mm (H x W x D)
Nett Weight	0.8 kg
Packaged Weight	0.8 kg

Product Details

Country of Origin	China
Product Material	Brass
Colour/Finish	Brushed Gold
Style	Traditional

© ROXOR Group