Sales Code: BCSBS003BB **Barcode:** 5056883738238 **Brand:** BC Designs **Description:** BC Sanitan Towel Rail For Ornate Brushed Brass Basin Stand



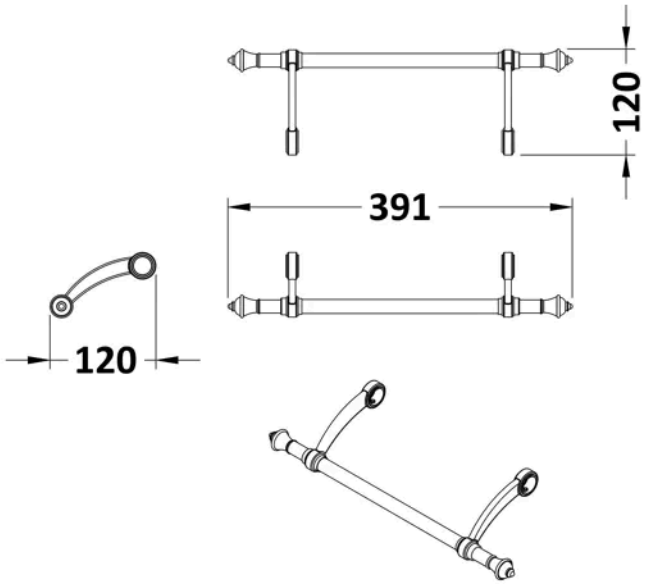

Product Dimensions

Product	391 x 120mm (W x D)
Packaged	31 x 300 x 480mm (H x W x D)
Nett Weight	0.76 kg
Packaged Weight	0.81 kg

Product Details

Country of Origin	China
Product Material	Brass
Colour/Finish	Brushed Brass
Style	Traditional

© ROXOR Group