Sales Code: BCSBS003 **Barcode:** 5056817798024 **Brand:** BC Designs **Description:** BC Sanitan Ornate Chrome Towel Rail For Basin Stand



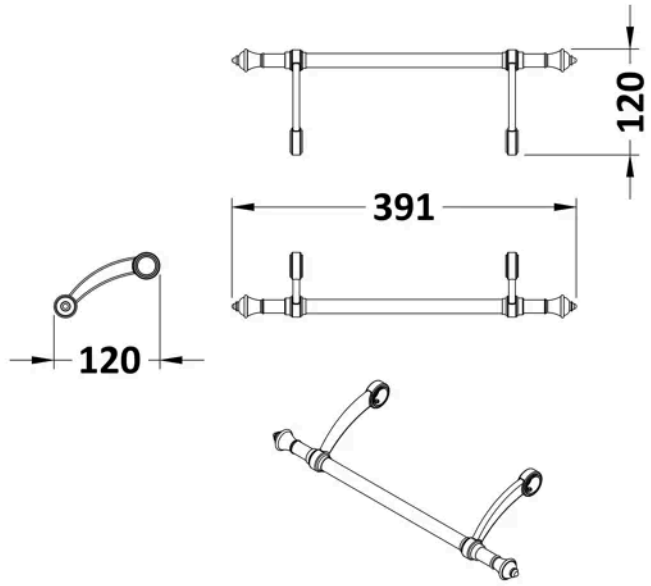

Product Dimensions

Product	120 x 391 x 120mm (H x W x D)
Packaged	31 x 300 x 480mm (H x W x D)
Nett Weight	0.76 kg
Packaged Weight	0.81 kg

Packaging Details

Label Size (mm)	50 x 100
Label Colour	White
Label Qty	2.0000

Product Details

Country of Origin	China
Product Material	Stainless Steel
Colour/Finish	Chrome
Style	Traditional
Fixings Included	No

© ROXOR Group