Sales Code: BCSA100 **Barcode:** 5056817797775 **Brand:** BC Designs **Description:** BC Sanitan Universal Close Couple Pan



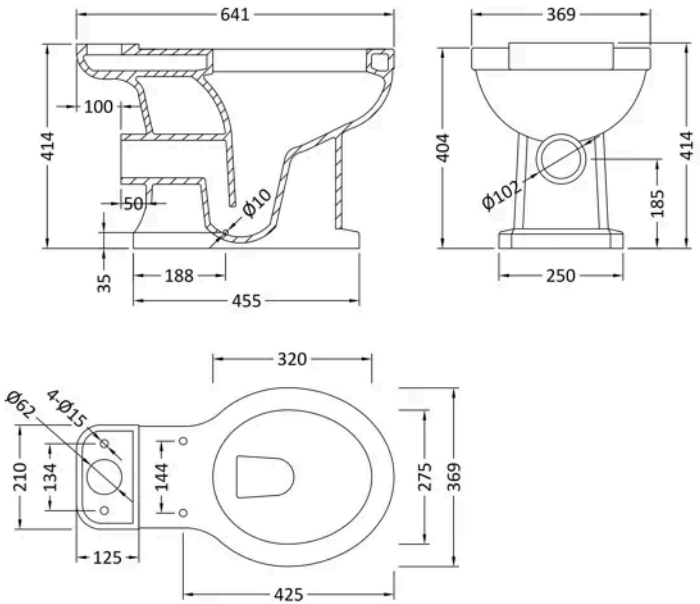

Product Dimensions

Packaged	650 x 392 x 482mm (H x W x D)
Nett Weight	22 kg
Packaged Weight	22 kg

Product Details

Colour/Finish	White

© ROXOR Group