**Sales Code:** BC417DL

**Barcode:** 5056211853282

**Brand:** Hudson Reed

**Description:** Hudson Reed Topaz Chrome Old London /Black 3 Tap Hole Wall Mounted Basin Mixer With Dome Collar and Lever Handle



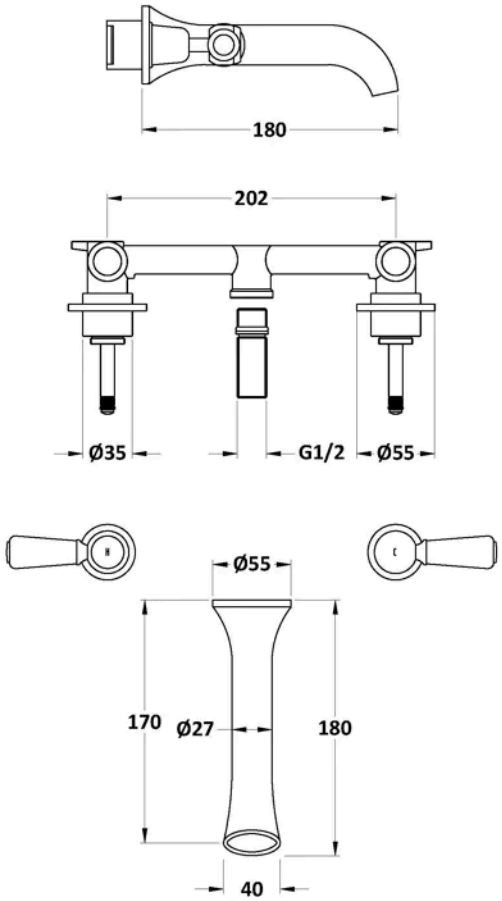


## Product Dimensions

| | |
|---|---|
| Product | 55 x 180mm (H x D) |
| Packaged | 65 x 350 x 213mm (H x W x D) |
| Nett Weight | 1.7 kg |
| Packaged Weight | 2 kg |

## Packaging Details

| | |
|---|---|
| Label Size (mm) | 50 x 100 |
| Label Colour | White |
| Label Qty | 1.0000 |

## Product Details

| | |
|---|---|
| Country of Origin | China |
| Product Material | Brass |
| Control Type | Manual |
| WRAS Approved | No |
| Valve/Cartridge Type | 1/4 Turn Ceramic Disc |
| Colour/Finish | Chrome |
| Mount Type | Wall Hung |
| Style | Traditional |
| Handle Type | Lever |
| TMV2 Approved | No |
| TMV3 Approved | No |
| Min Operating Pressure | 0.1 Bar |
| Tap Spout Projection | 180 mm |
| Valve / Cartridge Type | 1/4 Turn Ceramic Disc |
| Waste Included | No |

© ROXOR Group