Sales Code: BC404DL

Barcode: 5055275868034

Brand: Hudson Reed

Description: Hudson Reed Topaz Chrome Old London /Black Bath Shower Mixer With Dome Collar and Lever Handle



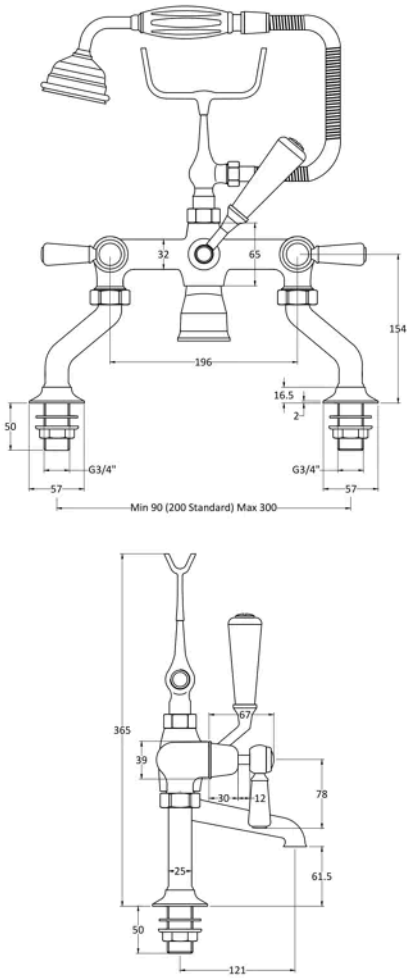

Product Dimensions

Product	320 x 350 x 155mm (H x W x D)
Packaged	150 x 232 x 330mm (H x W x D)
Outer Box	330 x 520 x 360mm (H x W x D)
Nett Weight	4.7 kg
Packaged Weight	4.9 kg

Packaging Details

Label Size (mm)	50 x 100
Label Colour	White
Label Qty	1.0000

Product Details

Country of Origin	China
Product Material	Brass
Control Type	Manual
WRAS Approved	No
Valve/Cartridge Type	1/4 Turn Ceramic Disc
Colour/Finish	Chrome
Mount Type	Deck
Style	Traditional
Handle Type	Lever
TMV2 Approved	No
TMV3 Approved	No
Pipe Size	22 mm (3/4" BSP)
Pipe Centres	90-300
Handset Included	Yes
Hose Included	Yes
Hose Length	1500 mm
Min Operating Pressure	0.2 Bar
Tap Spout Height	62 mm
Tap Spout Projection	121 mm
Valve / Cartridge Type	1/4 Turn Ceramic Disc
Waste Included	No

© ROXOR Group