Sales Code: BC403HX

Barcode: 5056211853237

Brand: Hudson Reed

Description: Hudson Reed Topaz Chrome Old London /Black Deck Mounted Bath Filler With Hexagonal Collar and Crosshead Handle



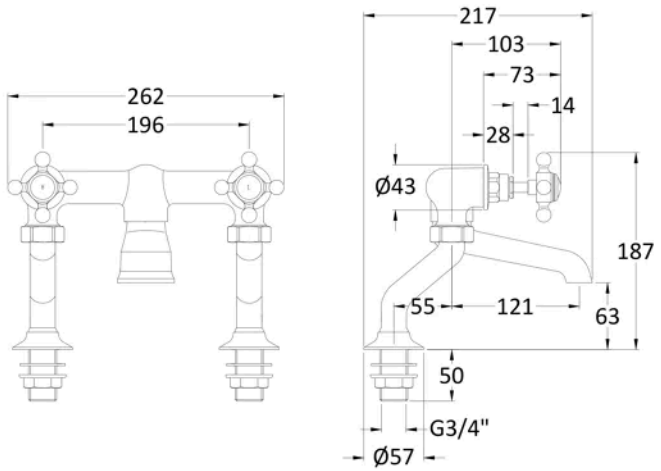

Product Dimensions

Product	187 x 262 x 217mm (H x W x D)
Packaged	125 x 250 x 200mm (H x W x D)
Outer Box	200 x 250 x 125mm (H x W x D)
Nett Weight	2 kg
Packaged Weight	2.3 kg

Packaging Details

Label Size (mm)	50 x 100
Label Colour	White
Label Qty	1.0000

Product Details

Country of Origin	China
Product Material	Brass
Control Type	Manual
WRAS Approved	No
Valve/Cartridge Type	1/4 Turn Ceramic Disc
Colour/Finish	Chrome
Mount Type	Deck
Style	Traditional
Handle Type	Crosshead
TMV2 Approved	No
TMV3 Approved	No
Pipe Size	22 mm (3/4" BSP)
Pipe Centres	200
Handset Included	Yes
Min Operating Pressure	0.2 Bar
Tap Spout Height	63 mm
Tap Spout Projection	121 mm
Valve / Cartridge Type	1/4 Turn Ceramic Disc
Waste Included	No

© ROXOR Group