Sales Code: BC402DL

Barcode: 5055275868010

Brand: Hudson Reed

Description: Hudson Reed Topaz Chrome Old London /Black Deck Mounted Bath Taps With Dome Collar and Lever Handle



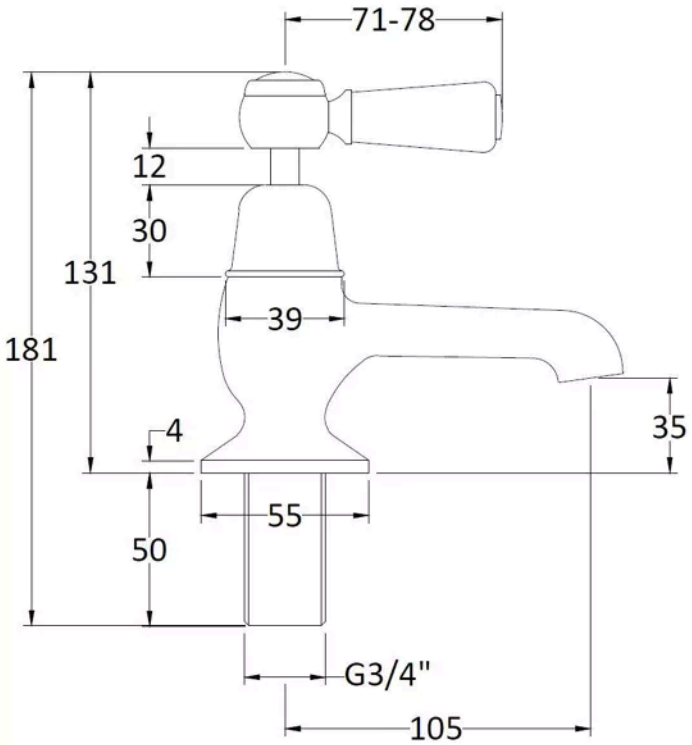

Product Dimensions

Product	141 x 66 x 138mm (H x W x D)
Packaged	55 x 160 x 260mm (H x W x D)
Outer Box	360 x 495 x 280mm (H x W x D)
Nett Weight	1.7 kg
Packaged Weight	1.9 kg

Packaging Details

Label Size (mm)	50 x 100
Label Colour	White
Label Qty	1.0000

Product Details

Country of Origin	China
Product Material	Brass
Control Type	Manual
WRAS Approved	No
Valve/Cartridge Type	1/4 Turn Ceramic Disc
Colour/Finish	Chrome
Mount Type	Deck
Style	Traditional
Handle Type	Lever
TMV2 Approved	No
TMV3 Approved	No
Pipe Size	22 mm (3/4" BSP)
Min Operating Pressure	0.1 Bar
Tap Spout Height	35 mm
Tap Spout Projection	105 mm
Valve / Cartridge Type	1/4 Turn Ceramic Disc
Waste Included	No

© ROXOR Group