Sales Code: BC401HX

Barcode: 5055275867983

Brand: Hudson Reed

Description: Hudson Reed Topaz Chrome Old London /Black Basin Taps With Hexagonal Collar and Crosshead Handle



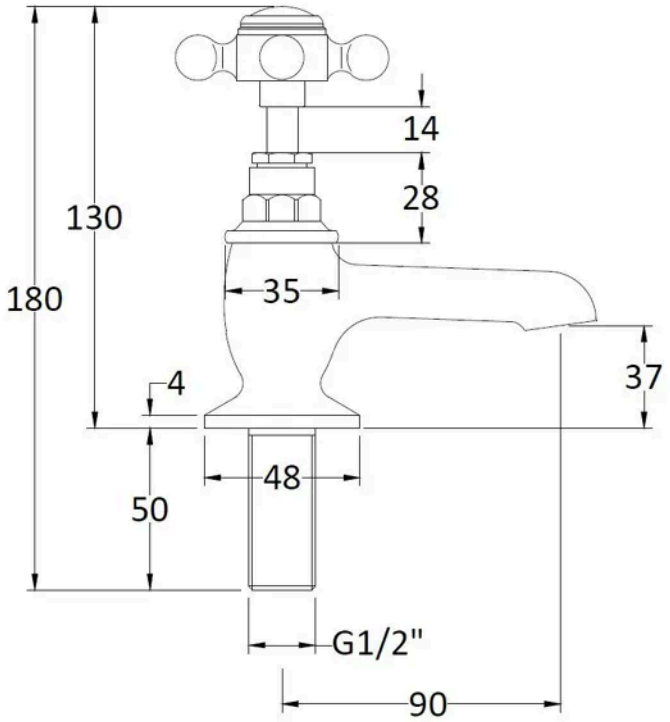

Product Dimensions

Product	141 x 66 x 119mm (H x W x D)
Packaged	55 x 160 x 260mm (H x W x D)
Outer Box	300 x 270 x 500mm (H x W x D)
Nett Weight	1.2 kg
Packaged Weight	1.4 kg

Packaging Details

Label Size (mm)	50 x 100
Label Colour	White
Label Qty	1.0000

Product Details

Country of Origin	China
Product Material	Brass
Control Type	Manual
WRAS Approved	No
Valve/Cartridge Type	1/4 Turn Ceramic Disc
Colour/Finish	Chrome
Mount Type	Deck
Style	Traditional
Handle Type	Crosshead
TMV2 Approved	No
TMV3 Approved	No
Min Operating Pressure	0.1 Bar
Tap Spout Height	37 mm
Tap Spout Projection	90 mm
Valve / Cartridge Type	1/4 Turn Ceramic Disc
Waste Included	No

© ROXOR Group