Sales Code: BC309DL

Barcode: 5055275830833

Brand: Old London

Description: Old London Topaz Chrome /White Wall Mounted Bath Tap With Dome Collar and Lever Handle



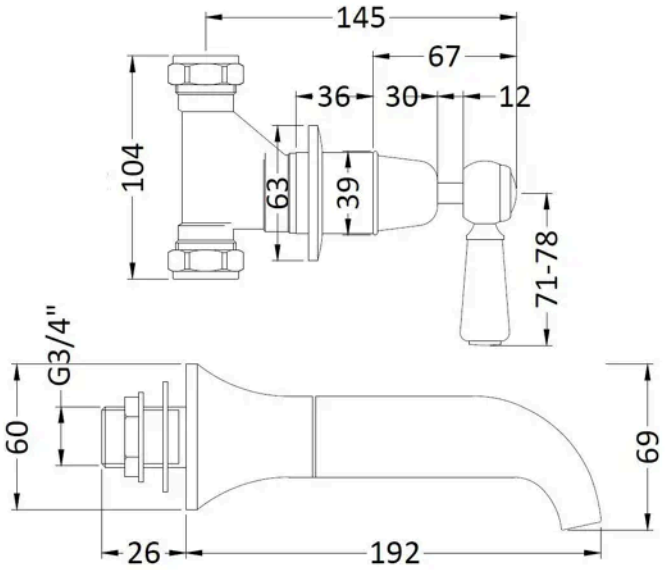

Product Dimensions

Product	69 x 218mm (H x D)
Packaged	85 x 185 x 270mm (H x W x D)
Outer Box	640 x 450 x 200mm (H x W x D)
Nett Weight	2.3 kg
Packaged Weight	2.5 kg

Packaging Details

Label Size (mm)	50 x 100
Label Colour	White
Label Qty	1.0000

Product Details

Country of Origin	United Kingdom
Product Material	Brass
Control Type	Manual
WRAS Approved	No
Valve/Cartridge Type	1/4 Turn Ceramic Disc
Colour/Finish	Chrome
Mount Type	Wall Hung
Style	Traditional
Handle Type	Lever
TMV2 Approved	No
TMV3 Approved	No
Pipe Size	22 mm (3/4" BSP)
Min Operating Pressure	0.1 Bar
Tap Spout Projection	192 mm
Valve / Cartridge Type	1/4 Turn Ceramic Disc
Waste Included	No

© ROXOR Group