Sales Code: BC307DL

Barcode: 5055275830826

Brand: Old London

Description: Old London Topaz Chrome /White 3 Tap Hole Basin Mixer With Dome Collar and Lever Handle and Waste



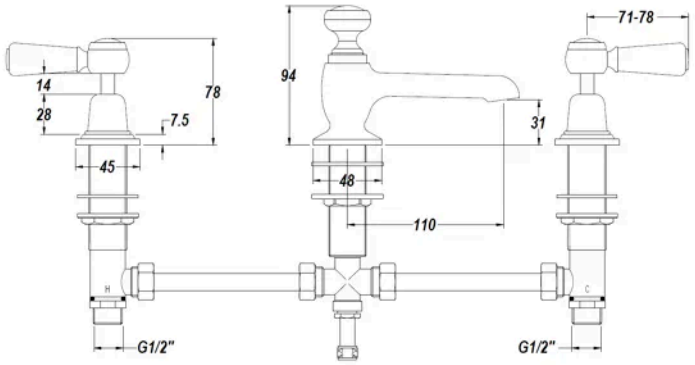

Product Dimensions

Product	94 x 246 x 140mm (H x W x D)
Packaged	75 x 150 x 430mm (H x W x D)
Outer Box	495 x 555 x 290mm (H x W x D)
Nett Weight	2.8 kg
Packaged Weight	3 kg

Packaging Details

Label Size (mm)	50 x 100
Label Colour	White
Label Qty	1.0000

Product Details

Country of Origin	United Kingdom
Product Material	Brass
Control Type	Manual
Waste Type	Pop-Up
WRAS Approved	No
Valve/Cartridge Type	1/4 Turn Ceramic Disc
Colour/Finish	Chrome
Mount Type	Deck
Style	Traditional
Handle Type	Lever
TMV2 Approved	No
TMV3 Approved	No
Min Operating Pressure	0.1 Bar
Tap Spout Height	31 mm
Tap Spout Projection	110 mm
Valve / Cartridge Type	1/4 Turn Ceramic Disc
Waste Included	Yes

© ROXOR Group