**Sales Code:** BC304HX

**Barcode:** 5055275830680

**Brand:** Old London

**Description:** Old London Topaz Chrome /White Deck Mounted Bath Shower Mixer With Hexagonal Collar and Crosshead Handle



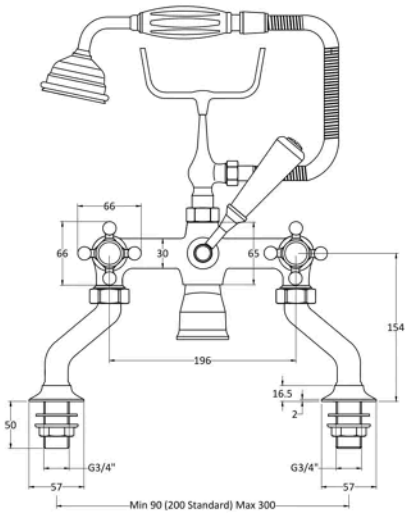


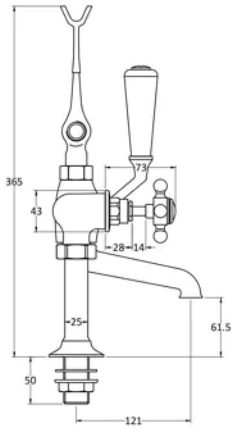


## Product Dimensions

| | |
|---|---|
| Product | 320 x 350 x 155mm (H x W x D) |
| Packaged | 150 x 232 x 330mm (H x W x D) |
| Outer Box | 320 x 345 x 520mm (H x W x D) |
| Nett Weight | 4.7 kg |
| Packaged Weight | 4.9 kg |

## Packaging Details

| | |
|---|---|
| Label Size (mm) | 50 x 100 |
| Label Colour | White |
| Label Qty | 1.0000 |

## Product Details

| | |
|---|---|
| Country of Origin | United Kingdom |
| Product Material | Brass |
| Control Type | Manual |
| WRAS Approved | No |
| Valve/Cartridge Type | 1/4 Turn Ceramic Disc |
| Colour/Finish | Chrome |
| Mount Type | Deck |
| Style | Traditional |
| Handle Type | Crosshead |
| TMV2 Approved | No |
| TMV3 Approved | No |
| Pipe Size | 22 mm (3/4" BSP) |
| Pipe Centres | 90-300 |
| Handset Included | Yes |
| Hose Included | Yes |
| Hose Length | 1500 mm |
| Min Operating Pressure | 0.2 Bar |
| Tap Spout Height | 62 mm |
| Tap Spout Projection | 121 mm |
| Valve / Cartridge Type | 1/4 Turn Ceramic Disc |
| Waste Included | No |

© ROXOR Group