Sales Code: BC01UBCO **Barcode:** 5056678473467 **Brand:** BC Designs **Description:** BC Designs Oval Brushed Copper Overflow Cover



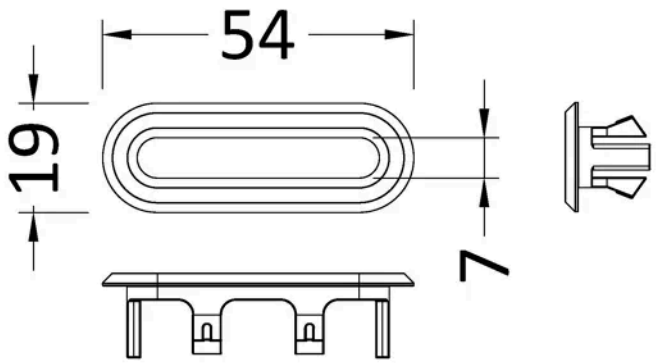

Product Dimensions

Product	26 x 50 x 10mm (H x W x D)
Packaged	30 x 30 x 30mm (H x W x D)
Nett Weight	0.2 kg
Packaged Weight	0.2 kg

Product Details

Country of Origin	China
Product Material	Abs
Colour/Finish	Brushed Copper
Style	Contemporary
Fixings Included	Yes

© ROXOR Group