**Sales Code:** BC01UBC **Barcode:** 5056678473443 **Brand:** BC Designs **Description:** BC Designs Oval Brushed Chrome Basin Overflow Cover

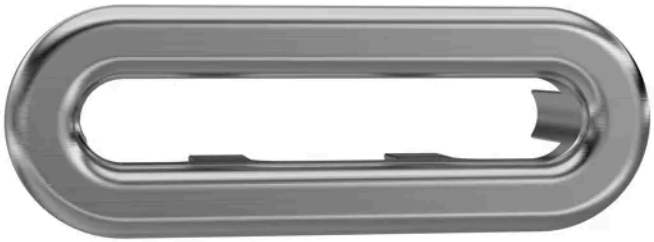

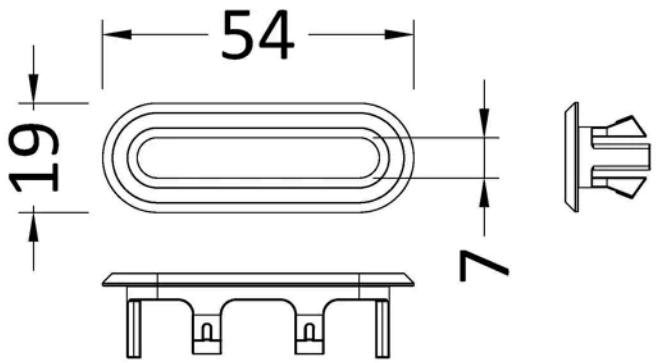


## Product Dimensions

| | |
|---|---|
| Product | 19 x 54 x 10mm (H x W x D) |
| Packaged | 30 x 30 x 30mm (H x W x D) |
| Nett Weight | 0.2 kg |
| Packaged Weight | 0.2 kg |

## Product Details

| | |
|---|---|
| Country of Origin | China |
| Product Material | Abs |
| Colour/Finish | Brushed Chrome |
| Style | Contemporary |
| Fixings Included | Yes |

© ROXOR Group