**Sales Code:** BAZSS018

**Barcode:** 5056678408988

**Brand:** nuie

**Description:** nuie 1700mm x 850mm White L-Shaped Right Hand Shower Bath, Hinged Bath Screen, Front panel And Leg Set





## Product Dimensions

| | |
|---|---|
| Product | 390 x 850 x 1700mm (H x W x L) |
| Packaged | 550 x 550 x 550mm (H x W x D) |
| Nett Weight | 46.6 kg |
| Packaged Weight | 46.6 kg |

## Packaging Details

| | |
|---|---|
| Box Qty | 3 |

## Product Details

| | |
|---|---|
| Volume | 235 Litre |
| Country of Origin | Turkey |
| Product Material | Acrylic,Aluminium |
| Colour/Finish | White |
| Style | Contemporary |
| Fixings Included | No |
| Adjustment Max | 795 |
| Adjustment Min | 780 |
| Bath Panel Included | Yes |
| Displaced Capacity | 165 Litre |
| Embossed | No |
| Frame Finish | Matt Black |
| Glass Thickness | 6 mm |
| Includes Grips | No |
| Leg Set Included | Yes |
| No. Of Tapholes | No Tapholes |
| Overflow Included | Yes |
| Painted Option Available | No |
| Tap Included | No |
| Waste Included | No |

© ROXOR Group

**Sales Code:** NSBS7BP **Barcode:** 5056211883784 **Brand:** nuie **Description:** nuie 800mm Matt Black L Shape Hinged Bath Screen



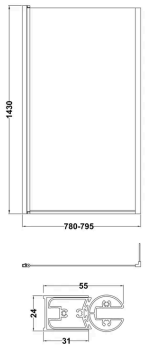


## Product Dimensions

| | |
|---|---|
| Product | 1430 x 795 x 150mm (H x W x D) |
| Packaged | 55 x 840 x 1460mm (H x W x D) |
| Nett Weight | 18.7 kg |
| Packaged Weight | 18.7 kg |

## Packaging Details

| | |
|---|---|
| Box Qty | 1 |

## Product Details

| | |
|---|---|
| Country of Origin | China |
| Product Material | Aluminium |
| Colour/Finish | Matt Black |
| Style | Contemporary |
| Fixings Included | Yes |
| Easy Clean | No |
| Adjustment Max | 795 |
| Adjustment Min | 780 |
| Ce Certified | Yes |
| Declaration Of Performance | No |
| Easy Fit | No |
| Enclosure Design | Semi-Frameless |
| Frame Finish | Matt Black |
| Glass Thickness | 6 mm |
| Handles Included | No |
| Support Bar Included | No |
| Swing In Dimension | 777 mm |
| Swing Out Dimension | 777 mm |
| Ukca Certified | Yes |

© ROXOR Group

**Sales Code:** NSK702S **Barcode:** 5056462696812 **Brand:** nuie **Description:** L Shape Shower Bath & Legs 1700x850 RH

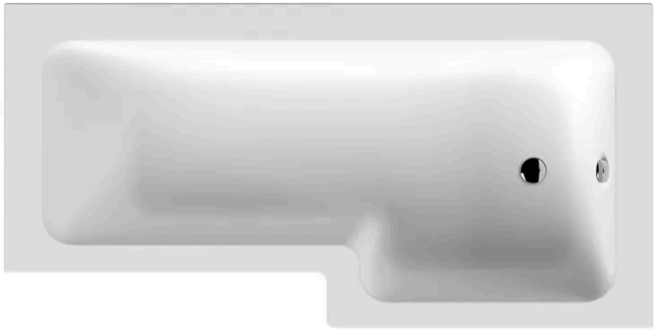

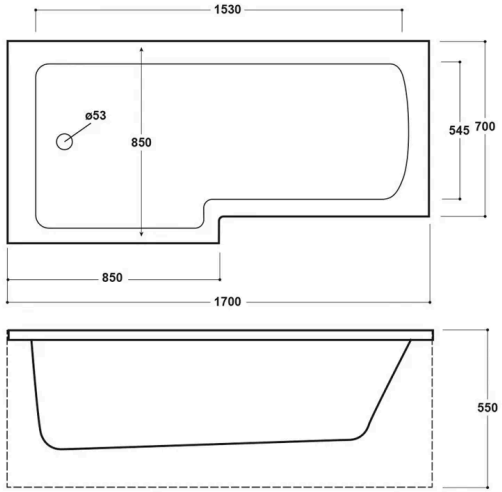


## Product Dimensions

| | |
|---|---|
| Product | 400 x 855 x 1695mm (H x W x L) |
| Packaged | 425 x 850 x 1700mm (H x W x D) |
| Nett Weight | 24.5 kg |
| Packaged Weight | 24.5 kg |

## Packaging Details

| | |
|---|---|
| Box Qty | 1 |
| Label Size (mm) | 35 x 300 |
| Label Colour | White |
| Label Qty | 2.0000 |

## Product Details

| | |
|---|---|
| Volume | 235 Litre |
| Country of Origin | Egypt |
| Product Material | Acrylic |
| Colour/Finish | White |
| Style | Contemporary |
| Fixings Included | No |
| Bath Panel Included | No |
| Ce Certified | Yes |
| Declaration Of Performance | Yes |
| Displaced Capacity | 165 Litre |
| Includes Grips | No |
| Leg Set Included | No |
| No. Of Tapholes | No Tapholes |
| Overflow Included | No |
| Tap Included | No |
| Ukca Certified | Yes |
| Waste Included | No |

© ROXOR Group

**Sales Code:** WBS300 **Barcode:** 5055369083596 **Brand:** nuie **Description:** nuie 1700mm L-Shaped Acrylic Shower Bath Front Panel

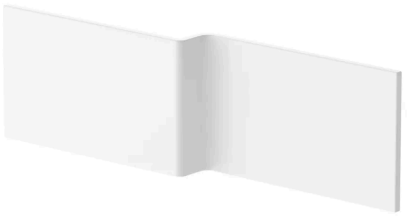

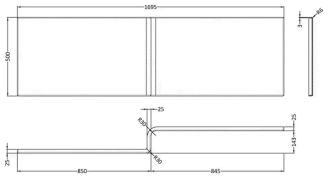

## Product Dimensions

| | |
|---|---|
| Product | 500 x 1700 x 150mm (H x W x D) |
| Packaged | 35 x 515 x 1720mm (H x W x D) |
| Nett Weight | 3.4 kg |
| Packaged Weight | 3.4 kg |

## Packaging Details

| | |
|---|---|
| Box Qty | 1 |

## Product Details

| | |
|---|---|
| Country of Origin | Turkey |
| Product Material | Acrylic |
| Colour/Finish | European White |
| Style | Contemporary |
| Fixings Included | No |
| Bath Panel Shape | Square |
| Bath Panel Type | Front Panel |

© ROXOR Group