**Sales Code:** BAZSS015

**Barcode:** 5056678408957

**Brand:** nuie

**Description:** nuie 1700mm x 850mm White L-Shaped Left Hand Shower Bath, Fixed Bath Screen, Front panel And Leg Set



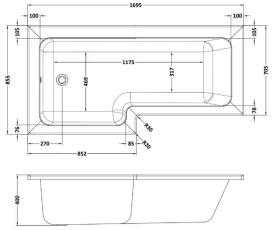

## Product Dimensions

| | |
|---|---|
| Product | 390 x 850 x 1700mm (H x W x L) |
| Packaged | 550 x 550 x 550mm (H x W x D) |
| Nett Weight | 45.4 kg |
| Packaged Weight | 45.9 kg |

## Packaging Details

| | |
|---|---|
| Box Qty | 3 |

## Product Details

| | |
|---|---|
| Volume | 235 Litre |
| Country of Origin | Turkey |
| Product Material | Acrylic,Aluminium |
| Colour/Finish | White |
| Style | Contemporary |
| Fixings Included | No |
| Adjustment Max | 815 |
| Adjustment Min | 800 |
| Bath Panel Included | Yes |
| Displaced Capacity | 165 Litre |
| Embossed | No |
| Frame Finish | Matt Black |
| Glass Thickness | 6 mm |
| Includes Grips | No |
| Leg Set Included | Yes |
| No. Of Tapholes | No Tapholes |
| Overflow Included | Yes |
| Painted Option Available | No |
| Tap Included | No |
| Waste Included | No |

© ROXOR Group

**Sales Code:** NSBS2BP **Barcode:** 5056462694825 **Brand:** nuie **Description:** nuie Matt Black L Shape Bath Screen With Fixed Return



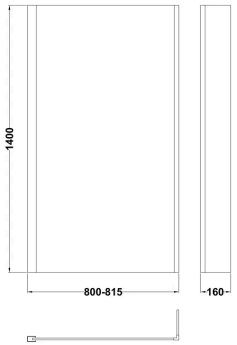


## Product Dimensions

| | |
|---|---|
| Product | 1400 x 815 x 38mm (H x W x D) |
| Packaged | 50 x 835 x 1460mm (H x W x D) |
| Nett Weight | 18 kg |
| Packaged Weight | 18.7 kg |

## Packaging Details

| | |
|---|---|
| Box Qty | 1 |
| Label Size (mm) | 30 x 140 |

## Product Details

| | |
|---|---|
| Country of Origin | China |
| Product Material | Aluminium |
| Colour/Finish | Matt Black |
| Style | Contemporary |
| Easy Clean | No |
| Adjustment Max | 815 |
| Adjustment Min | 800 |
| Ce Certified | Yes |
| Declaration Of Performance | Yes |
| Easy Fit | No |
| Enclosure Design | Semi-Frameless |
| Frame Finish | Matt Black |
| Glass Thickness | 6 mm |
| Handles Included | No |
| Support Bar Included | No |
| Ukca Certified | Yes |

© ROXOR Group

**Sales Code:** NSK701S **Barcode:** 5056462696805 **Brand:** nuie **Description:** Nuie 1700mm Left-Hand Square Shower Bath With Legs



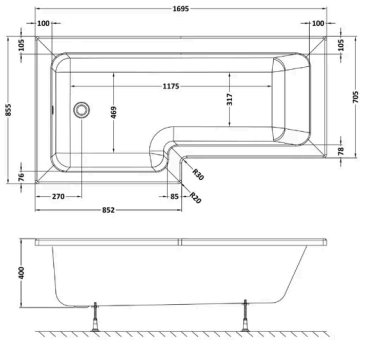


## Product Dimensions

| | |
|---|---|
| Product | 405 x 850 x 1695mm (H x W x L) |
| Packaged | 425 x 850 x 1700mm (H x W x D) |
| Nett Weight | 24.5 kg |
| Packaged Weight | 24.5 kg |

## Packaging Details

| | |
|---|---|
| Box Qty | 1 |
| Label Size (mm) | 35 x 300 |
| Label Colour | White |
| Label Qty | 2.0000 |

## Product Details

| | |
|---|---|
| Volume | 235 Litre |
| Country of Origin | Egypt |
| Product Material | Acrylic |
| Colour/Finish | White |
| Style | Contemporary |
| Fixings Included | No |
| Bath Panel Included | No |
| Ce Certified | Yes |
| Declaration Of Performance | Yes |
| Displaced Capacity | 165 Litre |
| Includes Grips | No |
| Leg Set Included | No |
| No. Of Tapholes | No Tapholes |
| Overflow Included | No |
| Tap Included | No |
| Ukca Certified | Yes |
| Waste Included | No |

© ROXOR Group

**Sales Code:** WBS300 **Barcode:** 5055369083596 **Brand:** nuie **Description:** nuie 1700mm L-Shaped Acrylic Shower Bath Front Panel

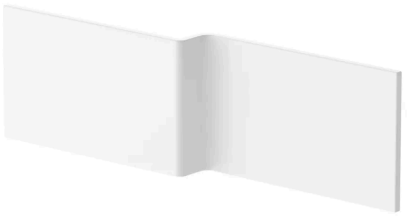

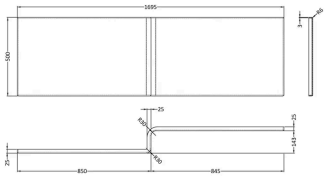

## Product Dimensions

| | |
|---|---|
| Product | 500 x 1700 x 150mm (H x W x D) |
| Packaged | 35 x 515 x 1720mm (H x W x D) |
| Nett Weight | 3.4 kg |
| Packaged Weight | 3.4 kg |

## Packaging Details

| | |
|---|---|
| Box Qty | 1 |

## Product Details

| | |
|---|---|
| Country of Origin | Turkey |
| Product Material | Acrylic |
| Colour/Finish | European White |
| Style | Contemporary |
| Fixings Included | No |
| Bath Panel Shape | Square |
| Bath Panel Type | Front Panel |

© ROXOR Group