Sales Code: BAZSS011

Barcode: 5056678408919

Brand: nuie

Description: nuie 1700mm x 850mm White L-Shaped Right Hand Shower Bath, Hinged Bath Screen, Front panel And Leg Set





Product Dimensions

Product	390 x 850 x 1700mm (H x W x L)
Packaged	550 x 550 x 550mm (H x W x D)
Nett Weight	52.4 kg
Packaged Weight	52.4 kg

Packaging Details

Box Qty	3

Product Details

Volume	235 Litre
Country of Origin	Turkey
Product Material	Acrylic
Colour/Finish	White
Style	Contemporary
Adjustment Max	810
Adjustment Min	800
Bath Panel Included	Yes
Displaced Capacity	165 Litre
Embossed	No
Frame Finish	Polished Chrome
Glass Thickness	6 mm
Includes Grips	No
Leg Set Included	Yes
No. Of Tapholes	No Tapholes
Overflow Included	Yes
Tap Included	No
Waste Included	No

© ROXOR Group

Sales Code: NSBS3 **Barcode:** 5055369043866 **Brand:** nuie **Description:** nuie 800mm Chrome L-Shaped Fixed Hinged Bath Screen



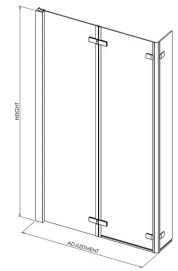

CODE	GLASS THICKNESS (mm)	HEIGHT (mm)	MIN ADJUSTMENT (mm)	MAX ADJUSTMENT (mm)
NSBS3	6	1400	800	825

Product Dimensions

Product	1400 x 812 x 38mm (H x W x D)
Packaged	65 x 455 x 1460mm (H x W x D)
Nett Weight	24.5 kg
Packaged Weight	24.5 kg

Packaging Details

Box Qty	1
Label Size (mm)	40 x 140

Product Details

Country of Origin	China
Product Material	Aluminium
Colour/Finish	Chrome
Style	Contemporary
Fixings Included	Yes
Easy Clean	No
Adjustment Max	810
Adjustment Min	800
Ce Certified	Yes
Declaration Of Performance	Yes
Easy Fit	No
Enclosure Design	Semi-Frameless
Frame Finish	Chrome
Glass Thickness	6 mm
Handles Included	No
Support Bar Included	No
Swing In Dimension	400 mm
Swing Out Dimension	400 mm
Ukca Certified	Yes

© ROXOR Group

Sales Code: NSK702S **Barcode:** 5056462696812 **Brand:** nuie **Description:** L Shape Shower Bath & Legs 1700x850 RH

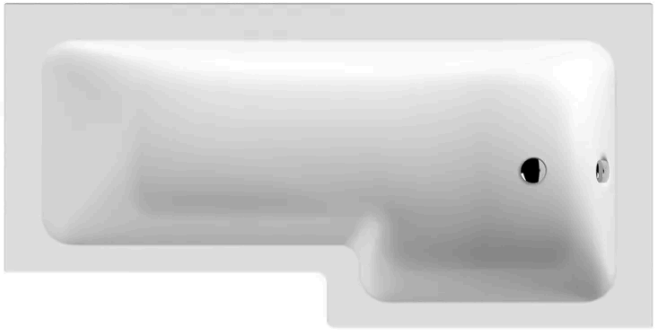

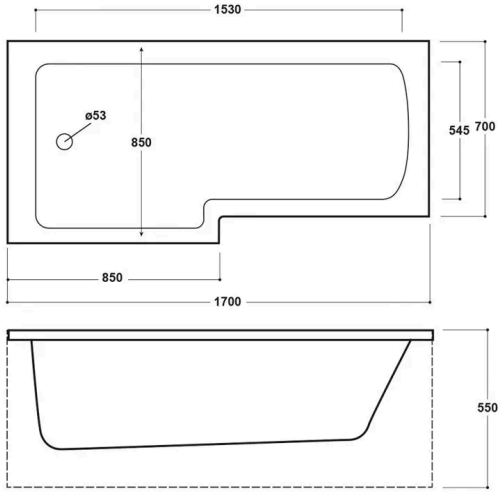

Product Dimensions

Product	400 x 855 x 1695mm (H x W x L)
Packaged	425 x 850 x 1700mm (H x W x D)
Nett Weight	24.5 kg
Packaged Weight	24.5 kg

Packaging Details

Box Qty	1
Label Size (mm)	35 x 300
Label Colour	White
Label Qty	2.0000

Product Details

Volume	235 Litre
Country of Origin	Egypt
Product Material	Acrylic
Colour/Finish	White
Style	Contemporary
Fixings Included	No
Bath Panel Included	No
Ce Certified	Yes
Declaration Of Performance	Yes
Displaced Capacity	165 Litre
Includes Grips	No
Leg Set Included	No
No. Of Tapholes	No Tapholes
Overflow Included	No
Tap Included	No
Ukca Certified	Yes
Waste Included	No

© ROXOR Group

Sales Code: WBS300 **Barcode:** 5055369083596 **Brand:** nuie **Description:** nuie 1700mm L-Shaped Acrylic Shower Bath Front Panel

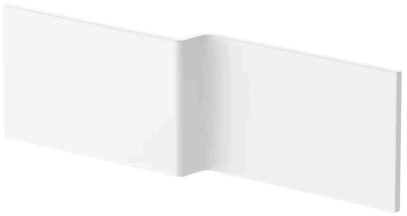

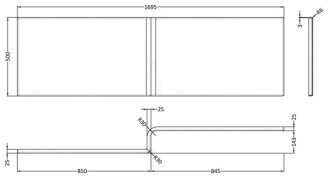

Product Dimensions

Product	500 x 1700 x 150mm (H x W x D)
Packaged	35 x 515 x 1720mm (H x W x D)
Nett Weight	3.4 kg
Packaged Weight	3.4 kg

Packaging Details

Box Qty	1

Product Details

Country of Origin	Turkey
Product Material	Acrylic
Colour/Finish	European White
Style	Contemporary
Fixings Included	No
Bath Panel Shape	Square
Bath Panel Type	Front Panel

© ROXOR Group