Sales Code: BAZSE116

Barcode: 5056678408728

Brand: nuie

Description: nuie 1700mm x 750mm White Square Single Ended Eternalite Bath, Bath Screen, Front Panel And Leg Set



Technical Drawing Not Available

Product Dimensions

Product	400 x 750 x 1700mm (H x W x L)
Packaged	550 x 550 x 550mm (H x W x D)
Nett Weight	46.5 kg
Packaged Weight	47 kg

Product Details

Volume	181 Litre
Country of Origin	United Kingdom
Product Material	Acrylic Eternalite
Colour/Finish	European White
Style	Contemporary
Adjustment Max	790
Adjustment Min	775
Bath Panel Included	Yes
Displaced Capacity	111 Litre
Embossed	No
Frame Finish	Matt Black
Glass Thickness	6 mm
Includes Grips	No
Leg Set Included	Yes
No. Of Tapholes	No Tapholes
Overflow Included	Yes
Tap Included	No
Waste Included	No

© ROXOR Group

Sales Code: BMON009 **Barcode:** 5055369060962 **Brand:** nuie **Description:** nuie Linton Eternalite 1700mm x 750mm Square Single Ended Bath With Legs

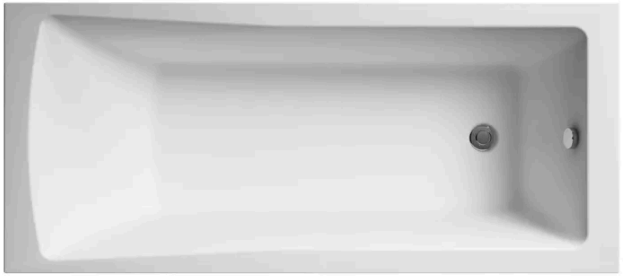

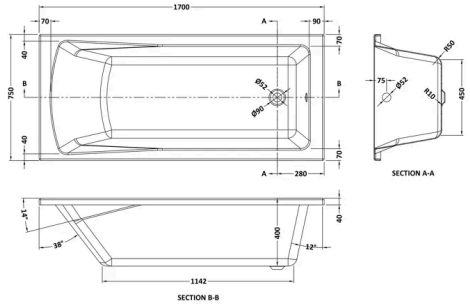

Product Dimensions

Product	400 x 750 x 1700mm (H x W x L)
Packaged	420 x 760 x 1770mm (H x W x D)
Nett Weight	27 kg
Packaged Weight	27 kg

Packaging Details

Box Qty	1
Label Size (mm)	50 x 100
Label Colour	White
Label Qty	2.0000

Product Details

Volume	181 Litre
Country of Origin	Egypt
Product Material	Acrylic Eternalite
Colour/Finish	White
Style	Contemporary
Fixings Included	No
Bath Panel Included	No
Ce Certified	Yes
Declaration Of Performance	Yes
Displaced Capacity	111 Litre
Includes Grips	No
Leg Set Included	Yes
No. Of Tapholes	No Tapholes
Overflow Included	No
Tap Included	No
Waste Included	No

© ROXOR Group

Sales Code: NSSQBF **Barcode:** 5056211881261 **Brand:** nuie **Description:** 800mm Matt Black Square Hinged Framed Bath Screen



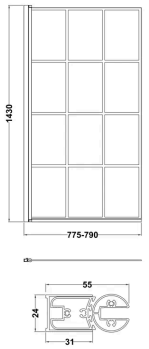

Product Dimensions

Product	1430 x 790 x 38mm (H x W x D)
Packaged	50 x 805 x 1460mm (H x W x D)
Nett Weight	17.9 kg
Packaged Weight	18.4 kg

Packaging Details

Box Qty	1

Product Details

Country of Origin	China
Product Material	Aluminium
Colour/Finish	Matt Black
Style	Contemporary
Easy Clean	No
Adjustment Max	790
Adjustment Min	775
Ce Certified	Yes
Declaration Of Performance	No
Easy Fit	No
Enclosure Design	Semi-Frameless
Frame Finish	Matt Black
Glass Thickness	6 mm
Handles Included	No
Support Bar Included	No
Swing In Dimension	700 mm
Swing Out Dimension	700 mm
Ukca Certified	Yes

© ROXOR Group

Sales Code: PAN140 **Barcode:** 5055369060832 **Brand:** nuie **Description:** nuie 1700mm Acrylic Front Bath Panel



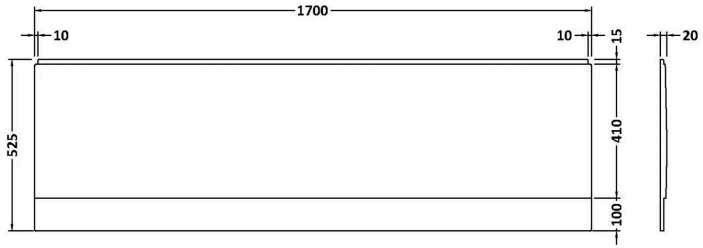

Product Dimensions

Product	510 x 1700 x 25mm (H x W x D)
Packaged	35 x 525 x 1700mm (H x W x D)
Nett Weight	2.1 kg
Packaged Weight	2.1 kg

Packaging Details

Box Qty	1

Product Details

Country of Origin	United Kingdom
Product Material	Acrylic
Colour/Finish	European White
Style	Contemporary
Bath Panel Shape	Straight
Bath Panel Type	Front Panel

© ROXOR Group