Sales Code: BAZSE059

Barcode: 5056678408155

Brand: nuie

Description: nuie 1700mm x 700mm White Square Single Ended Bath, Bath Screen, Front Panel And Leg Set



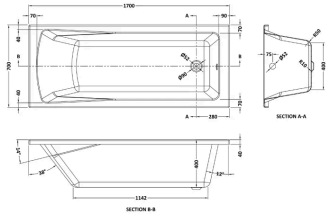

Product Dimensions

Product	400 x 700 x 1700mm (H x W x L)
Packaged	550 x 550 x 550mm (H x W x D)
Nett Weight	37.84 kg
Packaged Weight	38.34 kg

Packaging Details

Box Qty	3

Product Details

Volume	166 Litre
Country of Origin	Egypt
Product Material	Acrylic,Aluminium
Colour/Finish	White
Style	Contemporary
Fixings Included	No
Adjustment Max	790
Adjustment Min	775
Bath Panel Included	Yes
Displaced Capacity	96 Litre
Embossed	No
Frame Finish	Polished Chrome
Glass Thickness	6 mm
Includes Grips	No
Leg Set Included	Yes
No. Of Tapholes	No Tapholes
Overflow Included	Yes
Painted Option Available	No
Tap Included	No
Waste Included	No

© ROXOR Group

Sales Code: NBA409 **Barcode:** 5055369006700 **Brand:** nuie **Description:** nuie Linton 1700mm x 700mm Square Single Ended Bath With Legs

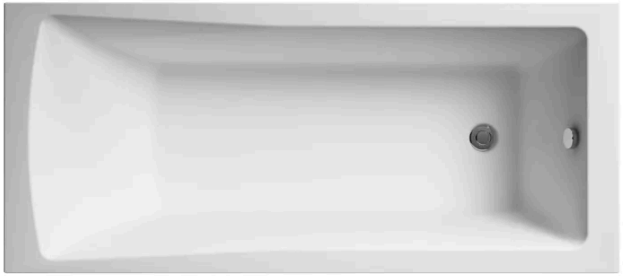

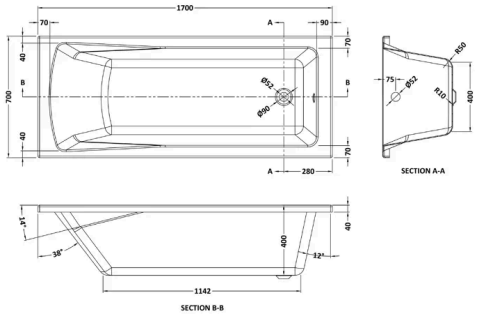

Product Dimensions

Product	400 x 700 x 1700mm (H x W x L)
Packaged	420 x 700 x 1700mm (H x W x D)
Nett Weight	19.24 kg
Packaged Weight	19.24 kg

Packaging Details

Box Qty	1
Label Size (mm)	50 x 100
Label Colour	White
Label Qty	2.0000

Product Details

Volume	178 Litre
Country of Origin	Egypt
Product Material	Acrylic
Colour/Finish	European White
Style	Contemporary
Bath Panel Included	No
Ce Certified	Yes
Displaced Capacity	108 Litre
Includes Grips	No
Leg Set Included	Yes
No. Of Tapholes	No Tapholes
Overflow Included	Yes
Tap Included	No
Waste Included	No
Waste Size Required	90mm

© ROXOR Group

Sales Code: NSSQ **Barcode:** 5055369002566 **Brand:** nuie **Description:** 800mm Chrome Bath Screen



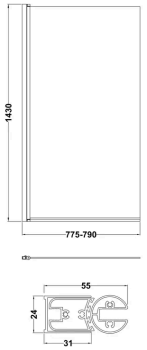

Product Dimensions

Product	1430 x 790 x 38mm (H x W x D)
Packaged	50 x 800 x 1440mm (H x W x D)
Nett Weight	17 kg
Packaged Weight	17.4 kg

Packaging Details

Box Qty	1

Product Details

Country of Origin	China
Product Material	Aluminium
Colour/Finish	Chrome
Style	Contemporary
Easy Clean	No
Adjustment Max	790
Adjustment Min	775
Ce Certified	Yes
Declaration Of Performance	No
Easy Fit	No
Enclosure Design	Semi-Frameless
Frame Finish	Chrome
Glass Thickness	6 mm
Handles Included	No
Support Bar Included	No
Swing In Dimension	700 mm
Swing Out Dimension	700 mm
Ukca Certified	Yes

© ROXOR Group

Sales Code: PAN140 **Barcode:** 5055369060832 **Brand:** nuie **Description:** nuie 1700mm Acrylic Front Bath Panel



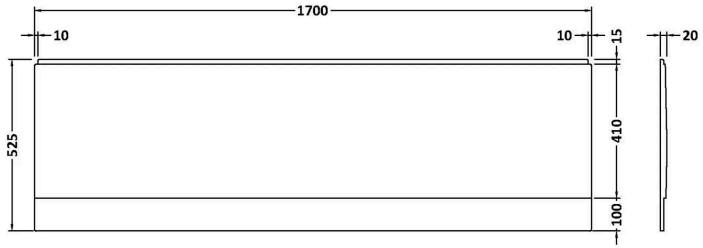

Product Dimensions

Product	510 x 1700 x 25mm (H x W x D)
Packaged	35 x 525 x 1700mm (H x W x D)
Nett Weight	2.1 kg
Packaged Weight	2.1 kg

Packaging Details

Box Qty	1

Product Details

Country of Origin	United Kingdom
Product Material	Acrylic
Colour/Finish	European White
Style	Contemporary
Bath Panel Shape	Straight
Bath Panel Type	Front Panel

© ROXOR Group