**Sales Code:** BAZSE046

**Barcode:** 5056678408025

**Brand:** nuie

**Description:** nuie 1700mm x 700mm White Round Single Ended Eternalite Bath, Bath Screen, Front Panel And Leg Set



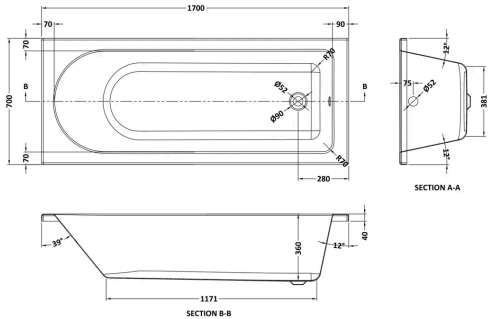


## Product Dimensions

| | |
|---|---|
| Product | 400 x 700 x 1700mm (H x W x L) |
| Packaged | 550 x 550 x 550mm (H x W x D) |
| Nett Weight | 42.5 kg |
| Packaged Weight | 43 kg |

## Packaging Details

| | |
|---|---|
| Box Qty | 3 |

## Product Details

| | |
|---|---|
| Volume | 150 Litre |
| Country of Origin | Egypt |
| Product Material | Acrylic |
| Colour/Finish | White |
| Style | Contemporary |
| Adjustment Max | 790 |
| Adjustment Min | 775 |
| Bath Panel Included | Yes |
| Displaced Capacity | 80 Litre |
| Embossed | No |
| Frame Finish | Matt Black |
| Glass Thickness | 6 mm |
| Includes Grips | No |
| Leg Set Included | Yes |
| No. Of Tapholes | No Tapholes |
| Overflow Included | Yes |
| Tap Included | No |
| Waste Included | No |

© ROXOR Group

**Sales Code:** BMON013 **Barcode:** 5055369060931 **Brand:** nuie **Description:** nuie Barmby Eternalite 1700mm x 700mm Round Single Ended Bath With Legs

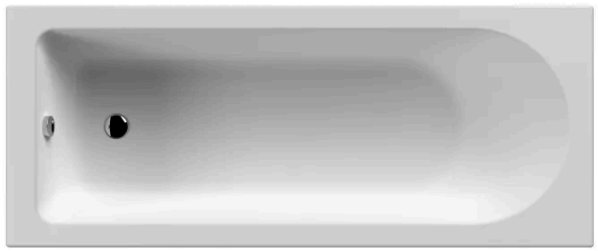

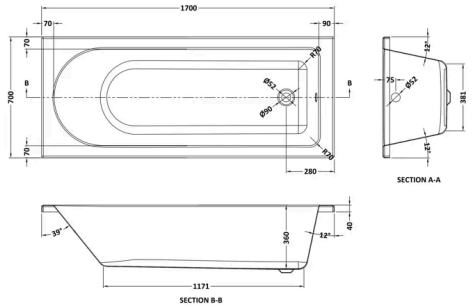


## Product Dimensions

| | |
|---|---|
| Product | 380 x 700 x 1700mm (H x W x L) |
| Packaged | 400 x 710 x 1770mm (H x W x D) |
| Nett Weight | 24 kg |
| Packaged Weight | 24 kg |

## Packaging Details

| | |
|---|---|
| Box Qty | 1 |
| Label Size (mm) | 50 x 100 |
| Label Colour | White |
| Label Qty | 2.0000 |

## Product Details

| | |
|---|---|
| Volume | 150 Litre |
| Country of Origin | Egypt |
| Product Material | Acrylic Eternalite |
| Colour/Finish | White |
| Style | Contemporary |
| Fixings Included | No |
| Bath Panel Included | No |
| Ce Certified | Yes |
| Declaration Of Performance | Yes |
| Displaced Capacity | 80 Litre |
| Includes Grips | No |
| Leg Set Included | Yes |
| No. Of Tapholes | No Tapholes |
| Overflow Included | No |
| Tap Included | No |
| Waste Included | No |

© ROXOR Group

**Sales Code:** NSS7BP **Barcode:** 5056211881308 **Brand:** nuie **Description:** 800mm Matt Black Round Hinged Bath Screen



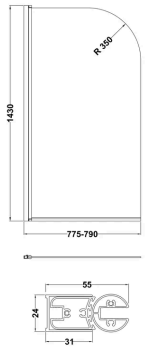


## Product Dimensions

| | |
|---|---|
| Product | 1430 x 790 x 24mm (H x W x D) |
| Packaged | 1460 x 805 x 50mm (H x W x D) |
| Nett Weight | 16.9 kg |
| Packaged Weight | 17.2 kg |

## Packaging Details

| | |
|---|---|
| Box Qty | 1 |

## Product Details

| | |
|---|---|
| Country of Origin | China |
| Product Material | Aluminium |
| Colour/Finish | Matt Black |
| Style | Contemporary |
| Easy Clean | No |
| Adjustment Max | 790 |
| Adjustment Min | 775 |
| Ce Certified | Yes |
| Declaration Of Performance | Yes |
| Easy Fit | No |
| Enclosure Design | Semi-Frameless |
| Frame Finish | Matt Black |
| Glass Thickness | 6 mm |
| Handles Included | No |
| Support Bar Included | No |
| Swing In Dimension | 700 mm |
| Swing Out Dimension | 700 mm |
| Ukca Certified | Yes |

© ROXOR Group

**Sales Code:** PAN140 **Barcode:** 5055369060832 **Brand:** nuie **Description:** nuie 1700mm Acrylic Front Bath Panel



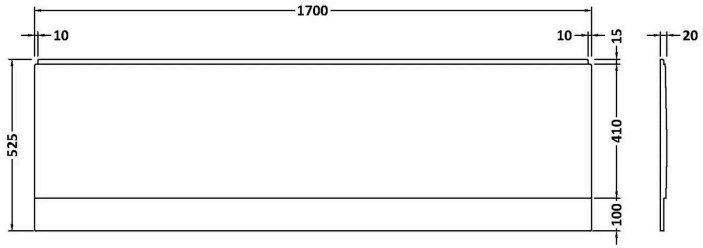


## Product Dimensions

| | |
|---|---|
| Product | 510 x 1700 x 25mm (H x W x D) |
| Packaged | 35 x 525 x 1700mm (H x W x D) |
| Nett Weight | 2.1 kg |
| Packaged Weight | 2.1 kg |

## Packaging Details

| | |
|---|---|
| Box Qty | 1 |

## Product Details

| | |
|---|---|
| Country of Origin | United Kingdom |
| Product Material | Acrylic |
| Colour/Finish | European White |
| Style | Contemporary |
| Bath Panel Shape | Straight |
| Bath Panel Type | Front Panel |

© ROXOR Group