Sales Code: BAZSE026

Barcode: 5056678407820

Brand: nuie

Description: nuie 1700mm x 700mm White Round Single Ended Eternalite Bath, Bath Screen, Front panel And Overflow



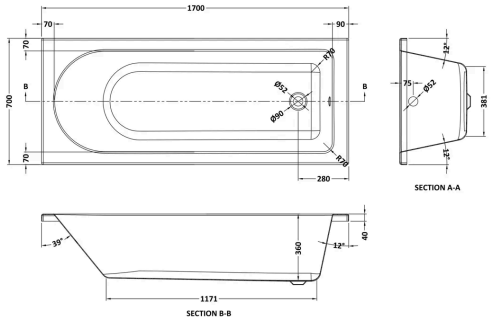

Product Dimensions

Product	400 x 700 x 1700mm (H x W x L)
Packaged	550 x 550 x 550mm (H x W x D)
Nett Weight	46.7 kg
Packaged Weight	47.2 kg

Product Details

Volume	150 Litre
Country of Origin	United Kingdom
Product Material	Acrylic Eternalite
Colour/Finish	European White
Style	Contemporary
Adjustment Max	830
Adjustment Min	815
Bath Panel Included	Yes
Displaced Capacity	80 Litre
Embossed	No
Frame Finish	Polished Chrome
Glass Thickness	8 mm
Includes Grips	No
Leg Set Included	Yes
No. Of Tapholes	No Tapholes
Overflow Included	Yes
Tap Included	No
Waste Included	No

© ROXOR Group

Sales Code: BMON013 **Barcode:** 5055369060931 **Brand:** nuie **Description:** nuie Barmby Eternalite 1700mm x 700mm Round Single Ended Bath With Legs

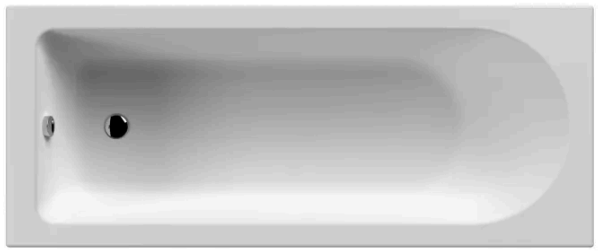

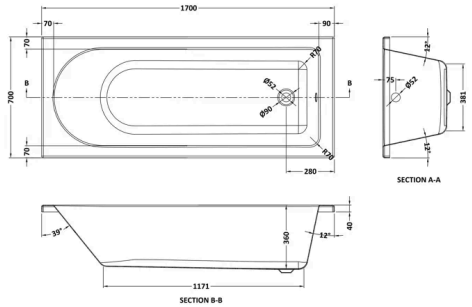

Product Dimensions

Product	380 x 700 x 1700mm (H x W x L)
Packaged	400 x 710 x 1770mm (H x W x D)
Nett Weight	24 kg
Packaged Weight	24 kg

Packaging Details

Box Qty	1
Label Size (mm)	50 x 100
Label Colour	White
Label Qty	2.0000

Product Details

Volume	150 Litre
Country of Origin	Egypt
Product Material	Acrylic Eternalite
Colour/Finish	White
Style	Contemporary
Fixings Included	No
Bath Panel Included	No
Ce Certified	Yes
Declaration Of Performance	Yes
Displaced Capacity	80 Litre
Includes Grips	No
Leg Set Included	Yes
No. Of Tapholes	No Tapholes
Overflow Included	No
Tap Included	No
Waste Included	No

© ROXOR Group

Sales Code: NSSQ7 **Barcode:** 5056211873112 **Brand:** nuie **Description:** 800mm Chrome Square Hinged Bath Screen



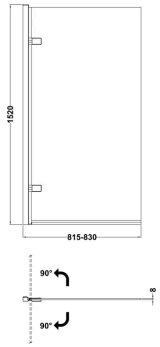

Product Dimensions

Product	1520 x 830 x 24mm (H x W x D)
Packaged	50 x 835 x 1560mm (H x W x D)
Nett Weight	21.1 kg
Packaged Weight	22.6 kg

Packaging Details

Box Qty	1

Product Details

Country of Origin	China
Product Material	Aluminium
Colour/Finish	Chrome
Style	Traditional
Easy Clean	No
Adjustment Max	830
Adjustment Min	815
Ce Certified	Yes
Declaration Of Performance	No
Easy Fit	No
Enclosure Design	Semi-Frameless
Frame Finish	Chrome
Glass Thickness	8 mm
Handles Included	No
Support Bar Included	No
Ukca Certified	Yes

© ROXOR Group

Sales Code: PAN140 **Barcode:** 5055369060832 **Brand:** nuie **Description:** nuie 1700mm Acrylic Front Bath Panel



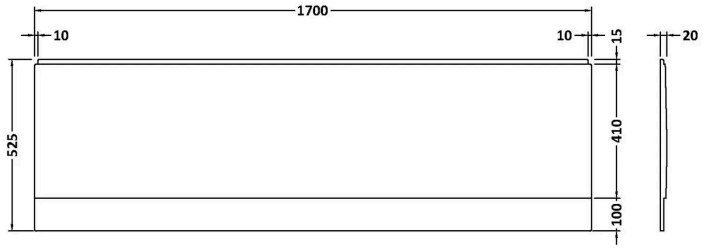

Product Dimensions

Product	510 x 1700 x 25mm (H x W x D)
Packaged	35 x 525 x 1700mm (H x W x D)
Nett Weight	2.1 kg
Packaged Weight	2.1 kg

Packaging Details

Box Qty	1

Product Details

Country of Origin	United Kingdom
Product Material	Acrylic
Colour/Finish	European White
Style	Contemporary
Bath Panel Shape	Straight
Bath Panel Type	Front Panel

© ROXOR Group