Sales Code: BAZSE003

Barcode: 5056678407332

Brand: nuie

Description: nuie 1700mm x 700mm White Round Single Ended Bath, Bath Screen, Front panel And Leg Set



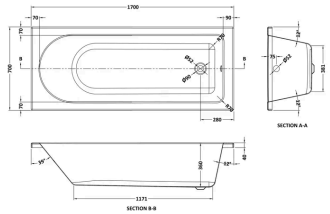

Product Dimensions

Product	355 x 700 x 1700mm (H x W x L)
Packaged	550 x 550 x 550mm (H x W x D)
Nett Weight	42.1 kg
Packaged Weight	42.6 kg

Packaging Details

Box Qty	3

Product Details

Volume	180 Litre
Country of Origin	Egypt
Product Material	Acrylic,Aluminium
Colour/Finish	White
Style	Contemporary
Fixings Included	No
Adjustment Max	998
Adjustment Min	983
Bath Panel Included	Yes
Displaced Capacity	110 Litre
Embossed	No
Frame Finish	Polished Chrome
Glass Thickness	6 mm
Includes Grips	No
Leg Set Included	Yes
No. Of Tapholes	No Tapholes
Overflow Included	Yes
Painted Option Available	No
Tap Included	No
Waste Included	No

© ROXOR Group

Sales Code: NBA609 **Barcode:** 5055369006649 **Brand:** nuie **Description:** nuie Barmby 1700mm x 700mm Round Single Ended Bath With Legs

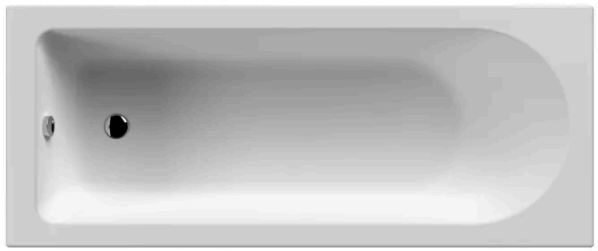

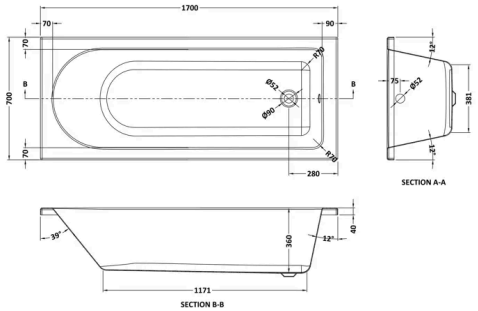

Product Dimensions

Product	380 x 700 x 1700mm (H x W x L)
Packaged	400 x 720 x 1700mm (H x W x D)
Nett Weight	17 kg
Packaged Weight	17 kg

Packaging Details

Box Qty	1
Label Size (mm)	50 x 100
Label Colour	White
Label Qty	2.0000

Product Details

Volume	180 Litre
Country of Origin	Egypt
Product Material	Acrylic
Colour/Finish	European White
Style	Contemporary
Bath Panel Included	No
Ce Certified	Yes
Displaced Capacity	110 Litre
Includes Grips	No
Leg Set Included	Yes
No. Of Tapholes	No Tapholes
Overflow Included	Yes
Tap Included	No
Waste Included	No
Waste Size Required	90mm

© ROXOR Group

Sales Code: NSSQ1 **Barcode:** 5055369001361 **Brand:** nuie **Description:** nuie 1000mm Chrome Bath Screen With Fixed Panel



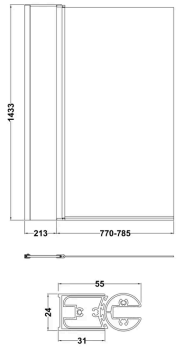

Product Dimensions

Product	1433 x 998 x 24mm (H x W x D)
Packaged	50 x 1015 x 1460mm (H x W x D)
Nett Weight	23.5 kg
Packaged Weight	24 kg

Packaging Details

Box Qty	1
Label Size (mm)	50 x 100

Product Details

Country of Origin	China
Product Material	Aluminium
Colour/Finish	Chrome
Style	Contemporary
Fixings Included	Yes
Easy Clean	No
Adjustment Max	998
Adjustment Min	983
Ce Certified	Yes
Declaration Of Performance	Yes
Easy Fit	No
Enclosure Design	Semi-Frameless
Frame Finish	Chrome
Glass Thickness	6 mm
Handles Included	No
Support Bar Included	No
Swing In Dimension	700 mm
Swing Out Dimension	700 mm
Ukca Certified	Yes

© ROXOR Group

Sales Code: PAN140 **Barcode:** 5055369060832 **Brand:** nuie **Description:** nuie 1700mm Acrylic Front Bath Panel



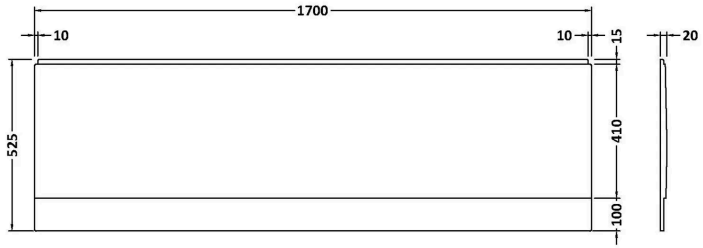

Product Dimensions

Product	510 x 1700 x 25mm (H x W x D)
Packaged	35 x 525 x 1700mm (H x W x D)
Nett Weight	2.1 kg
Packaged Weight	2.1 kg

Packaging Details

Box Qty	1

Product Details

Country of Origin	United Kingdom
Product Material	Acrylic
Colour/Finish	European White
Style	Contemporary
Bath Panel Shape	Straight
Bath Panel Type	Front Panel

© ROXOR Group