Sales Code: BAYW001 **Barcode:** 5055275890387 **Brand:** Bayswater **Description:** Bayswater Chrome Basin Bottle Trap



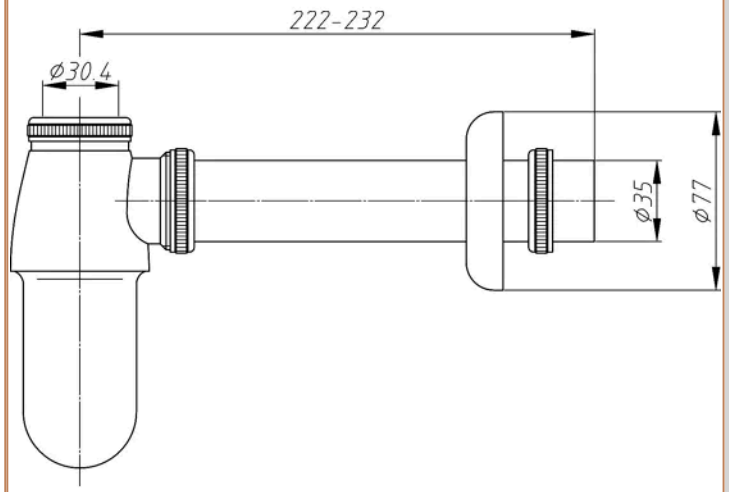

Product Dimensions

Product	263 x 77 x 77mm (H x W x D)
Packaged	85 x 110 x 200mm (H x W x D)
Nett Weight	0.66 kg
Packaged Weight	0.67 kg

Packaging Details

Box Qty	1
Label Size (mm)	50 x 100
Label Colour	White
Label Qty	2.0000

Product Details

Country of Origin	China
Product Material	Brass
Colour/Finish	Chrome
Style	Contemporary
Product Diameter	73 mm

© ROXOR Group