Sales Code: BAYV411 **Barcode:** 5056211807087 **Brand:** Bayswater **Description:** Bayswater Chrome Angled Crosshead Radiator Valve (Pair)



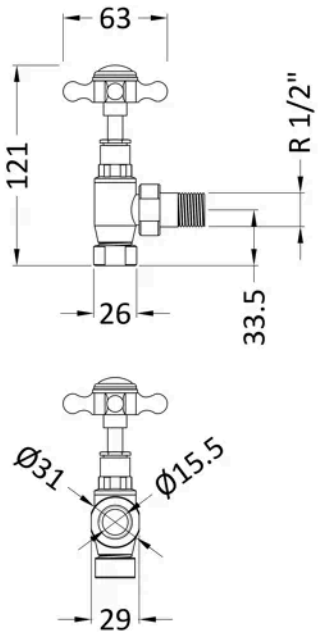

Product Dimensions

Product	120 x 66 x 66mm (H x W x D)
Packaged	78 x 110 x 115mm (H x W x D)
Nett Weight	0.4 kg
Packaged Weight	0.7 kg

Packaging Details

Box Qty	1

Product Details

Country of Origin	China
Product Material	Steel
Colour/Finish	Chrome
Style	Traditional

© ROXOR Group