Sales Code: BAYV108 **Barcode:** 5055275890226 **Brand:** Bayswater **Description:** Bayswater Chrome Angled Thermostatic Radiator Valve



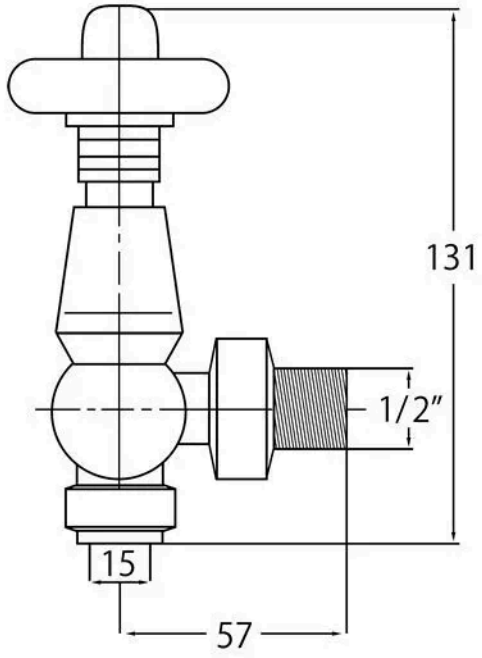

Product Dimensions

Product	131 x 55 x 97mm (H x W x D)
Packaged	185 x 145 x 85mm (H x W x D)
Nett Weight	0.83 kg
Packaged Weight	0.83 kg

Packaging Details

Box Qty	1

Product Details

Country of Origin	United Kingdom
Product Material	Brass
Colour/Finish	Chrome
Style	Traditional

© ROXOR Group