Sales Code: BAYV104 **Barcode:** 5055275890189 **Brand:** Bayswater **Description:** Bayswater Antique Brass Angled Thermostatic Radiator Valve with Fluted Lockshield

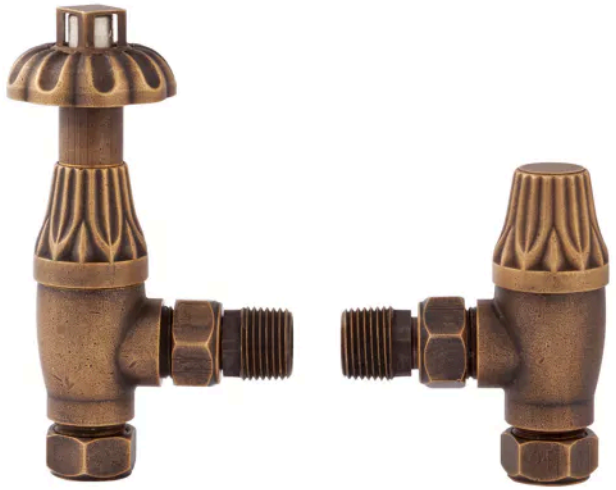

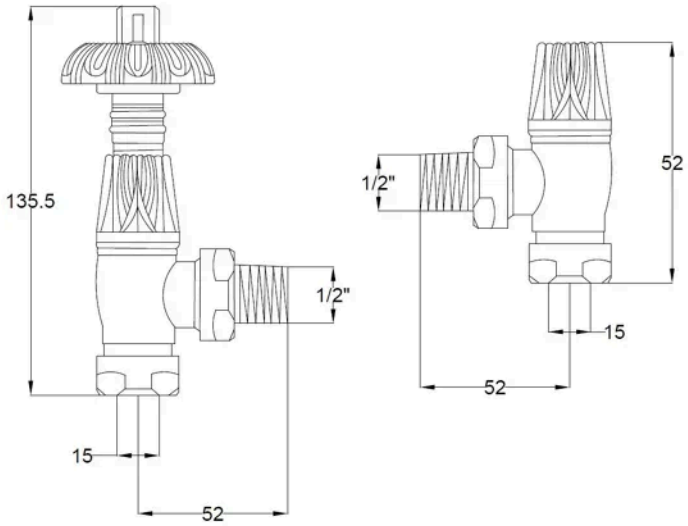

Product Dimensions

Product	136 x 55 x 80mm (H x W x D)
Packaged	85 x 145 x 185mm (H x W x D)
Nett Weight	0.83 kg
Packaged Weight	0.83 kg

Packaging Details

Box Qty	1

Product Details

Country of Origin	United Kingdom
Product Material	Steel
Colour/Finish	Antique Brass
Style	Traditional

© ROXOR Group