Sales Code: BAYTS701

Barcode: 5056883735817

Brand: Bayswater

Description: Bayswater Westcott White Round Soft Close Traditional Toilet Seat With Brushed Pewter Hinges



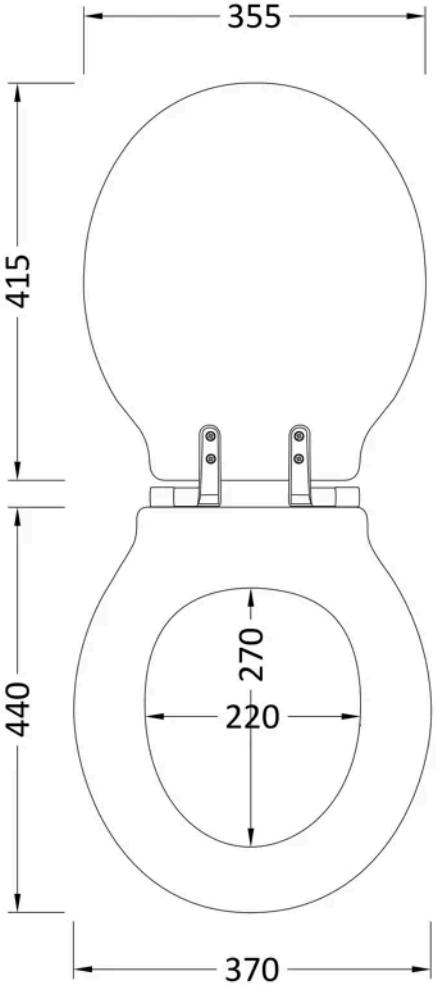

Product Dimensions

Product	30 x 370 x 440mm (H x W x D)
Packaged	30 x 395 x 495mm (H x W x D)
Nett Weight	8 kg
Packaged Weight	8 kg

Product Details

Country of Origin	China
Product Material	Mdf Vinyl
Colour/Finish	White
Style	Traditional
Toilet Seat Function	Soft Close
Toilet Seat Hinge Material	Stainless Steel
Toilet Seat Hinge Type	Bottom Fix
Toilet Seat Type	Round

© ROXOR Group