Sales Code: BAYTS002

Barcode: 5056817725020

Brand: Bayswater

Description: Bayswater Westcott Matt Black Round Soft Close Traditional Toilet Seat With Chrome Hinges



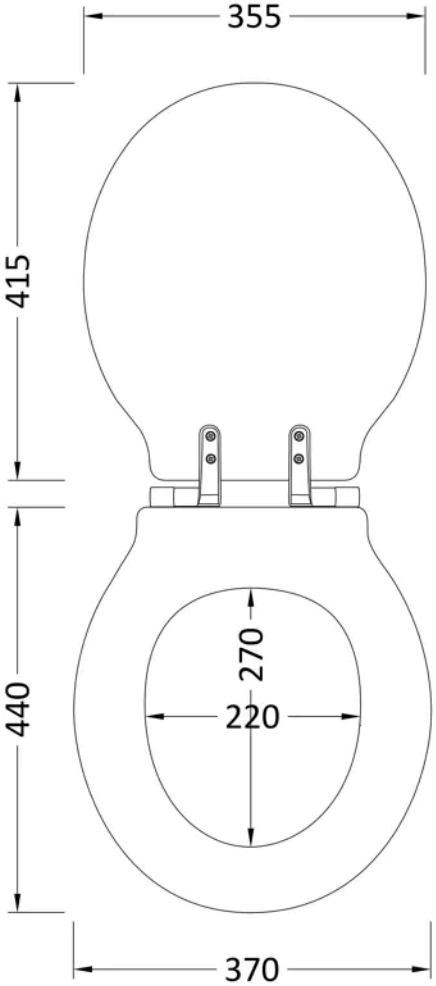

Product Dimensions

Product	30 x 370 x 440mm (H x W x D)
Packaged	30 x 395 x 495mm (H x W x D)
Nett Weight	8 kg
Packaged Weight	8 kg

Product Details

Country of Origin	China
Product Material	Mdf Vinyl
Colour/Finish	Matt Black
Style	Traditional
Toilet Seat Function	Soft Close
Toilet Seat Hinge Material	Stainless Steel
Toilet Seat Hinge Type	Bottom Fix
Toilet Seat Type	Round

© ROXOR Group