Sales Code: BAYR011 **Barcode:** 5055275890004 **Brand:** Bayswater **Description:** Bayswater Sophia Chrome 750mm x 475mm Horizontal Towel Rail



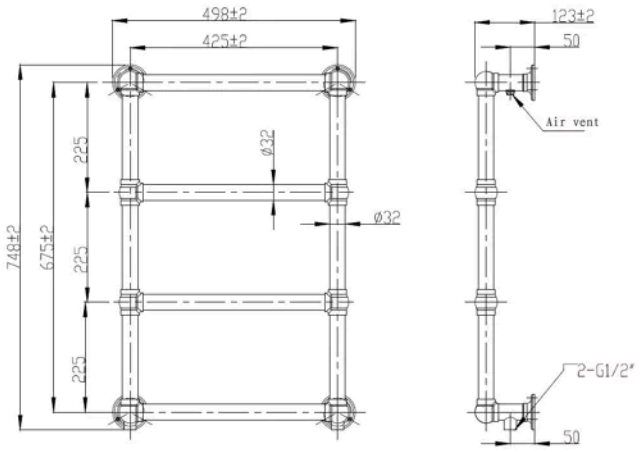

Product Dimensions

Product	748 x 498 x 123mm (H x W x D)
Packaged	140 x 520 x 775mm (H x W x D)
Nett Weight	5.8 kg
Packaged Weight	6.8 kg

Packaging Details

Box Qty	1
Label Size (mm)	50 x 100
Label Colour	White
Label Qty	2.0000

Product Details

Country of Origin	China
Product Material	Steel
Colour/Finish	Chrome
Mount Type	Wall Hung
Style	Traditional
Pipe Centres	425
Brackets Included	Yes
Btu Output 30	267
Btu Output 50	502
Ce Certified	Yes
Declaration Of Performance	No
Fuel Type	Water
Maximum Projection	123 mm
Number Of Heat Settings	1.0000
Rohs Certification	No
Thermal Output 30	78.0000 Watts
Thermal Output 50	147.0000 Watts
Tube Diameter	32 mm
Ukca Certified	No
Wall To Centre Tappings	50 mm
Weee Certification	No

© ROXOR Group