Sales Code: BAYR008 **Barcode:** 5055275889978 **Brand:** Bayswater **Description:** Bayswater Juliet Chrome 1548mm x 598mm Horizontal Towel Rail



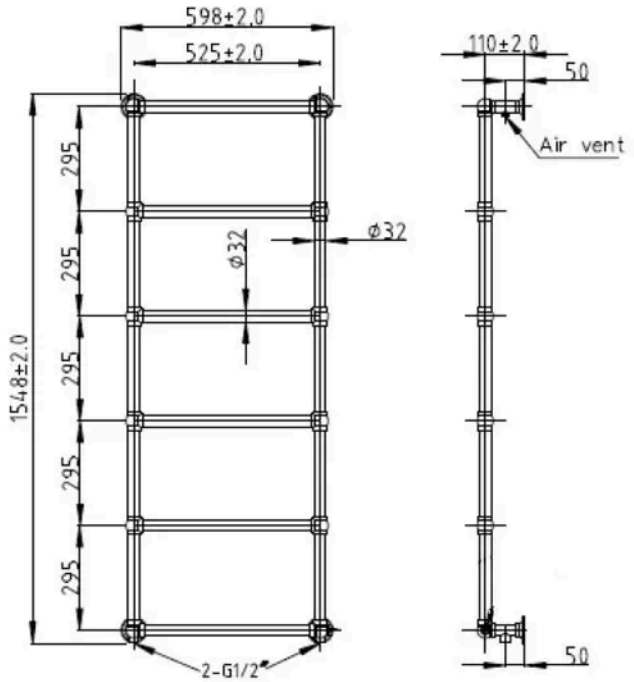

Product Dimensions

Product	1548 x 598 x 130mm (H x W x D)
Packaged	145 x 620 x 1575mm (H x W x D)
Nett Weight	9.3 kg
Packaged Weight	11.3 kg

Packaging Details

Box Qty	1
Label Size (mm)	50 x 100
Label Colour	White
Label Qty	2.0000

Product Details

Country of Origin	China
Product Material	Steel
Colour/Finish	Chrome
Mount Type	Wall Hung
Style	Traditional
Pipe Centres	525
Brackets Included	Yes
Btu Output 30	488
Btu Output 50	922
Ce Certified	Yes
Declaration Of Performance	Yes
Fuel Type	Water
Maximum Projection	130 mm
Number Of Heat Settings	1.0000
Rohs Certification	No
Thermal Output 30	143.0000 Watts
Thermal Output 50	270.0000 Watts
Tube Diameter	32 mm
Ukca Certified	Yes
Wall To Centre Tappings	50 mm
Weee Certification	No

© ROXOR Group