**Sales Code:** BAYFH81DWSB1CT

**Barcode:** 5056817740986

**Brand:** Bayswater

**Description:** Bayswater Hartleigh 800mm Stiffkey Blue 1 Drawer Wall Hung Cabinet With 1 Tap Hole Marble Worktop



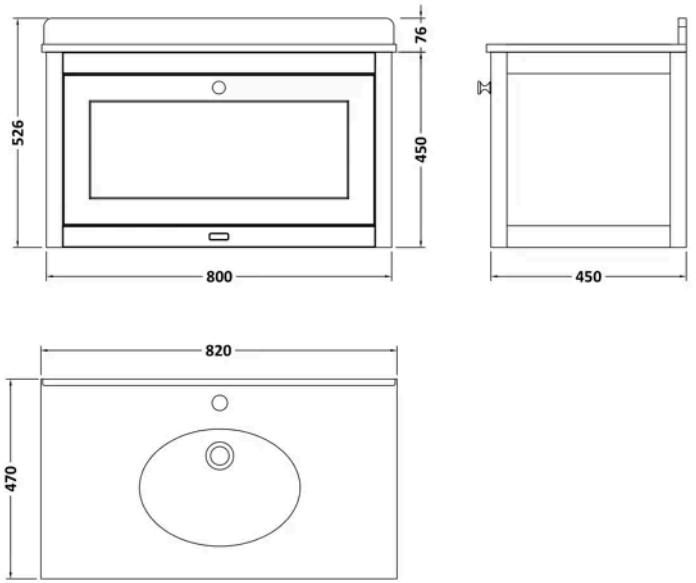


## Product Dimensions

| | |
|---|---|
| Product | 878 x 820 x 470mm (H x W x D) |
| Packaged | 780 x 1420 x 960mm (H x W x D) |
| Nett Weight | 43.5 kg |
| Packaged Weight | 43.5 kg |

## Product Details

| | |
|---|---|
| Country of Origin | Ukraine |
| Product Material | Mfc Painted Matt,Natural Marble,Vitreous China |
| Colour/Finish | Stiffkey Blue |
| Mount Type | Wall Hung |
| Style | Traditional |
| Handle Type | Knob |
| Construction Method | Cam & Wood Dowel |
| Construction Type | Rigid |
| Drawer Type | 80mm High Metal S/C Inc Gallery |
| Fascia Finish | Mdf Painted Matt |
| Handles Included | Yes |
| Inner Bowl Depth | 272 mm |
| Inner Bowl Height | 160 mm |
| Inner Bowl Width | 358 mm |
| Material Thickness | 18 mm |
| No. Drawers | 1 |
| No. Of Tapholes | 1 |
| Number Of Bowls | 1 |
| Overflow Cover Included | Yes |
| Overflow Included | Yes |
| Tap Included | No |
| Waste Included | No |
| Waste Shroud | Yes |

© ROXOR Group

**Sales Code:** BAYC258 **Barcode:** 5056678499399 **Brand:** Bayswater **Description:** Bayswater 800mm 1 Tap Hole Single Bowl White Marble Top Basin



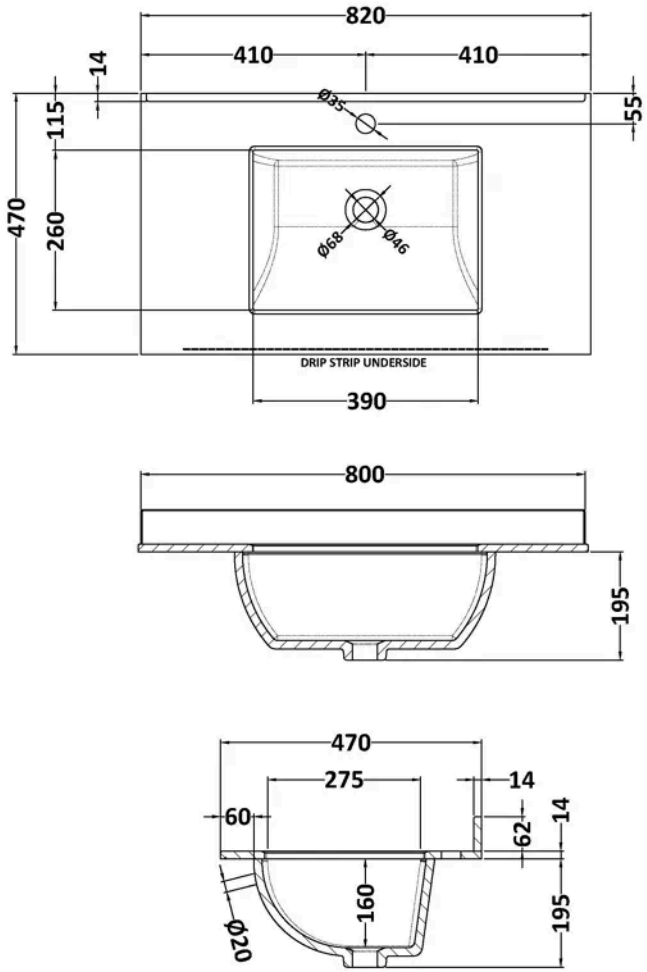


## Product Dimensions

| | |
|---|---|
| Product | 209 x 820 x 463mm (H x W x D) |
| Packaged | 250 x 900 x 580mm (H x W x D) |
| Nett Weight | 20.5 kg |
| Packaged Weight | 21 kg |

## Packaging Details

| | |
|---|---|
| Box Qty | 1 |
| Label Size (mm) | 50 x 100 |
| Label Colour | White |
| Label Qty | 2.0000 |

## Product Details

| | |
|---|---|
| Country of Origin | China |
| Product Material | Vitreous China |
| Colour/Finish | White |
| Style | Traditional |
| Bottle Trap Included | No |
| Ce Certified | Yes |
| Inner Bowl Depth | 275 mm |
| Inner Bowl Height | 160 mm |
| Inner Bowl Width | 390 mm |
| No. Of Tapholes | 1 |
| Number Of Bowls | 1 |
| Overflow Cover Included | No |
| Overflow Included | Yes |
| Tap Included | No |
| Waste Included | No |

© ROXOR Group

**Sales Code:** BAYF324H **Barcode:** 5056817727499 **Brand:** Bayswater **Description:** Bayswater Hartleigh 800mm Stiffkey Blue 1 Drawer Wall Hung Vanity Unit



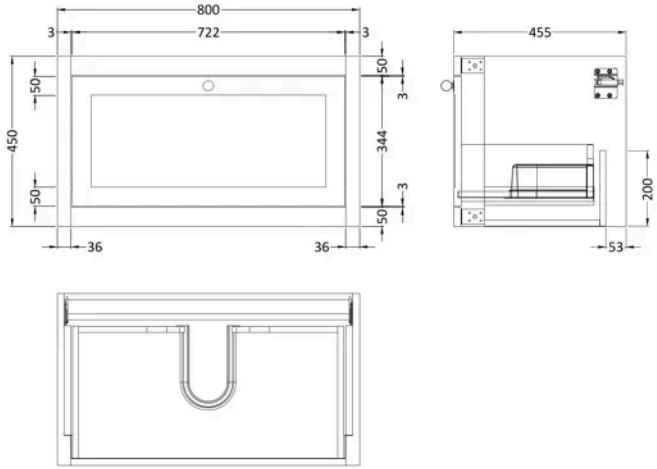


## Product Dimensions

| | |
|---|---|
| Product | 450 x 800 x 450mm (H x W x D) |
| Packaged | 490 x 855 x 490mm (H x W x D) |
| Nett Weight | 22 kg |
| Packaged Weight | 22.5 kg |

## Product Details

| | |
|---|---|
| Country of Origin | Ukraine |
| Product Material | Mfc Painted Matt |
| Colour/Finish | Stiffkey Blue |
| Mount Type | Wall Hung |
| Style | Traditional |
| Handle Type | Knob |
| Construction Method | Cam & Wood Dowel |
| Construction Type | Rigid |
| Drawer Type | 80mm High Metal S/C Inc Gallery |
| Fascia Finish | Mdf Painted Matt |
| Handles Included | Yes |
| Material Thickness | 18 mm |
| No. Drawers | 1 |
| Waste Shroud | Yes |

© ROXOR Group